T22S, R7W, 6th P.M.

SGOMI

Well location, SIEGRIST 2207 #7–1H, located as shown in the SE 1/4 SE 1/4 of SECTION 7, T22S, R7W, 6th P.M., Reno County, Kansas.

BASIS OF ELEVATION

SPOT ELEVATION LOCATED AT THE SW CORNER OF SECTION 18, T23S, R8W, 6th P.M. TAKEN FROM THE ALDEN SE, QUADRANGLE, KANSAS, RENO COUNTY, 7.5 MINUTE QUAD (TOPOGRAPHIC MAP) PUBLISHED BY THE UNITED STATES DEPARTMENT OF THE INTERIOR, GEOLOGICAL SURVEY, SAID ELEVATION IS MARKED AS BEING 1688 FEET.

BASIS OF BEARINGS

BASIS OF BEARINGS IS A G.P.S. OBSERVATION.

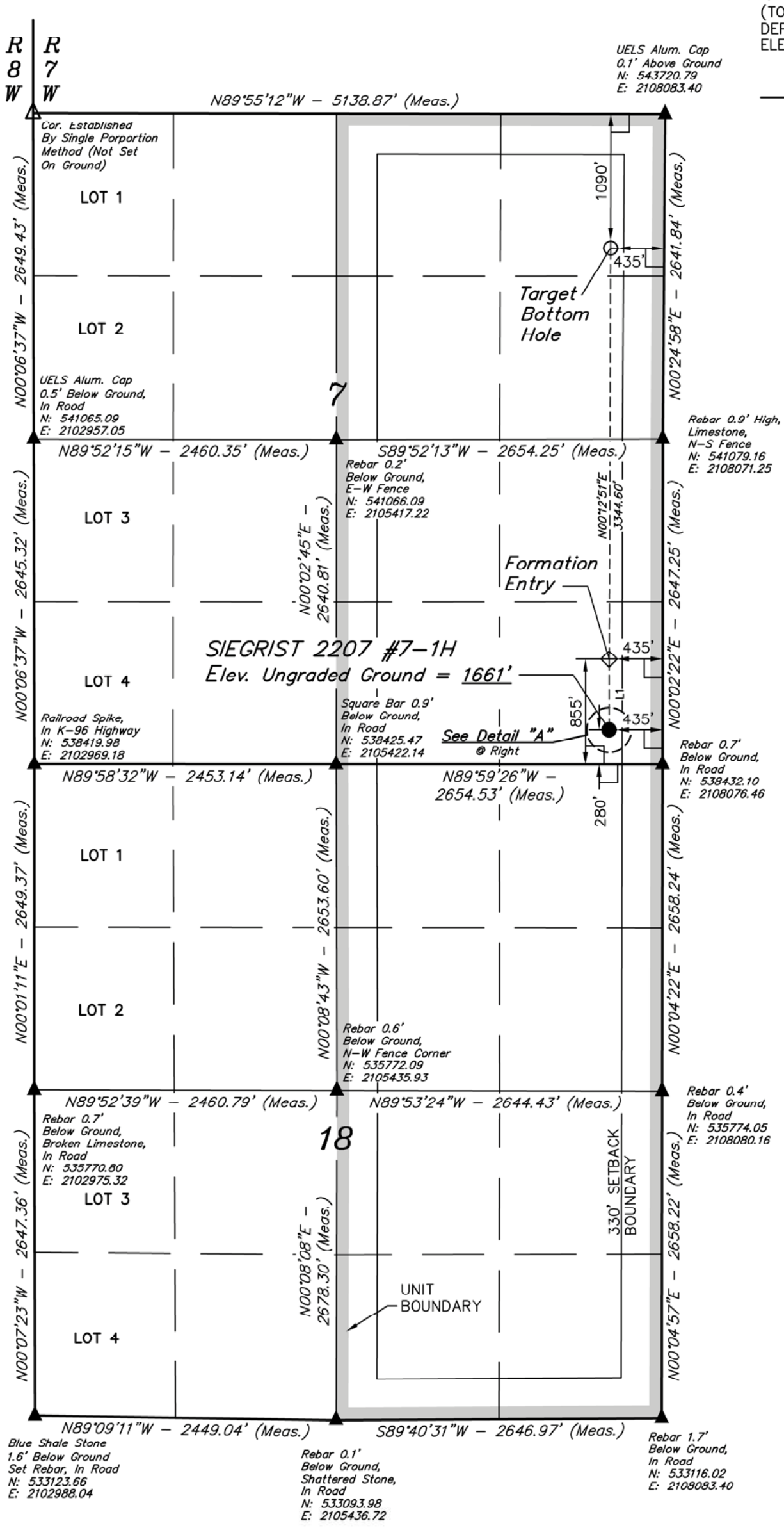

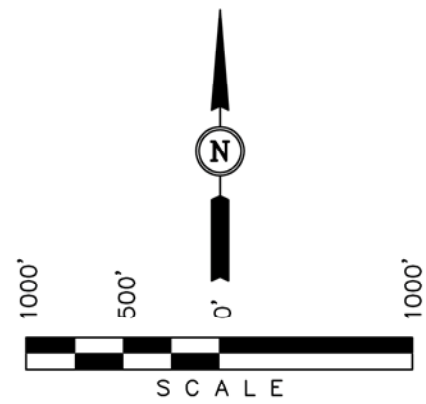

LINE TABLE		
LINE	DIRECTION	LENGTH
L1	N00°02'01"E	574.98'

LEGEND:

└ = 90° SYMBOL

● = PROPOSED WELL HEAD.

▲ = SECTION CORNERS LOCATED.

△ = SECTION CORNERS RE–ESTABLISHED. (Not Set on Ground.)

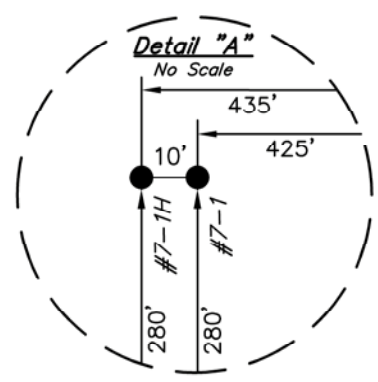

CERTIFICATE

THIS IS TO CERTIFY THAT THE ABOVE PLAT WAS PREPARED FROM FIELD NOTES OF ACTUAL SURVEYS MADE BY ME OR UNDER MY SUPERVISION AND THAT THE SAME ARE TRUE AND CORRECT TO THE BEST OF MY KNOWLEDGE AND BELIEF.

Robert Justin Pence 8/145

REGISTERED LAND SURVEYOR
REGISTRATION NO. 145
STATE OF KANSAS 10–05–12

ROBERT JUSTIN PENCE 145 REGISTERED LAND SURVEYOR STATE OF KANSAS

UINTAH ENGINEERING & LAND SURVEYING
85 SOUTH 200 EAST – VERNAL, UTAH 84078
(435) 789–1017

NAD 83 (#7–1H TARGET BOTTOM HOLE)	NAD 83 (#7–1H FORMATION ENTRY)	NAD 83 (#7–1H SURFACE LOCATION)
LATITUDE = 38°09'22.85" (38.156347)	LATITUDE = 38°08'49.79" (38.147164)	LATITUDE = 38°08'44.10" (38.145583)
LONGITUDE = 98°07'33.52" (98.125978)	LONGITUDE = 98°07'33.74" (98.126039)	LONGITUDE = 98°07'33.75" (98.126042)
NAD 27 (#7–1H TARGET BOTTOM HOLE)	**NAD 27 (#7–1H FORMATION ENTRY)**	**NAD 27 (#7–1H SURFACE LOCATION)**
LATITUDE = 38°09'22.81" (38.156336)	LATITUDE = 38°08'49.75" (38.147153)	LATITUDE = 38°08'44.06" (38.145572)
LONGITUDE = 98°07'32.31" (98.125642)	LONGITUDE = 98°07'32.52" (98.125700)	LONGITUDE = 98°07'32.54" (98.125706)
STATE PLANE NAD 27 (KANSAS SOUTH)	**STATE PLANE NAD 27 (KANSAS SOUTH)**	**STATE PLANE NAD 27 (KANSAS SOUTH)**
N: 542630.31 E: 2107643.41	N: 539285.95 E: 2107639.81	N: 538711.01 E: 2107641.00

SCALE 1" = 1000'	DATE SURVEYED: 09–26–12	DATE DRAWN: 10–01–12
PARTY J.P. C.B. C.A.G.	REFERENCES G.L.O. PLAT	
WEATHER HOT	FILE SGOMI	