1173075

For KCC Use:
Effective Date: 12/21/2013
District # 4
SGA? [ ] Yes [X] No

KANSAS CORPORATION COMMISSION
OIL & GAS CONSERVATION DIVISION

Form C-1
March 2010
Form must be Typed
Form must be Signed
All blanks must be Filled

NOTICE OF INTENT TO DRILL

Must be approved by KCC five (5) days prior to commencing well

Form KSONA-1, Certification of Compliance with the Kansas Surface Owner Notification Act, MUST be submitted with this form.

Expected Spud Date: 01/10/2014 (month day year)

OPERATOR: License# 5259
Name: Mai Oil Operations, Inc.
Address 1: 8411 PRESTON RD STE 800
Address 2:
City: DALLAS State: TX Zip: 75225 + 5520
Contact Person: Allen Bangert
Phone: 214-219-8883

CONTRACTOR: License# 33350
Name: Southwind Drilling, Inc.

Well Drilled For:		*Well Class:*	*Type Equipment:*
[X] Oil	[ ] Enh Rec	[X] Infield	[X] Mud Rotary
[ ] Gas	[ ] Storage	[ ] Pool Ext.	[ ] Air Rotary
	[ ] Disposal	[ ] Wildcat	[ ] Cable
[ ] Seismic ; ____ # of Holes		[ ] Other	

[ ] Other:

[ ] If OWWO: old well information as follows:

Operator:
Well Name:
Original Completion Date: Original Total Depth:

Directional, Deviated or Horizontal wellbore? [ ] Yes [X] No
If Yes, true vertical depth:
Bottom Hole Location:
KCC DKT #:

Spot Description:
___ - SE - SW - SW (Q/Q/Q/Q) Sec. 8 Twp. 17 S. R. 14 [ ] E [X] W
330 feet from [ ] N / [X] S Line of Section
990 feet from [ ] E / [X] W Line of Section
Is SECTION: [X] Regular [ ] Irregular?

(***Note:*** *Locate well on the Section Plat on reverse side*)

County: Barton
Lease Name: B. Axman Well #: 1
Field Name: Capital View
Is this a Prorated / Spaced Field? [ ] Yes [X] No
Target Formation(s): Arbuckle
Nearest Lease or unit boundary line (in footage): 330
Ground Surface Elevation: 1915 Surveyed feet MSL
Water well within one-quarter mile: [X] Yes [ ] No
Public water supply well within one mile: [ ] Yes [X] No
Depth to bottom of fresh water: 180
Depth to bottom of usable water: 360
Surface Pipe by Alternate: [X] I [ ] II
Length of Surface Pipe Planned to be set: 900
Length of Conductor Pipe (if any):
Projected Total Depth: 3500
Formation at Total Depth: Arbuckle
Water Source for Drilling Operations:
[ ] Well [X] Farm Pond [ ] Other:
DWR Permit #:
(***Note:*** *Apply for Permit with DWR* [ ])
Will Cores be taken? [ ] Yes [X] No
If Yes, proposed zone:

AFFIDAVIT

The undersigned hereby affirms that the drilling, completion and eventual plugging of this well will comply with K.S.A. 55 et. seq.

It is agreed that the following minimum requirements will be met:

1. Notify the appropriate district office ***prior*** to spudding of well;
2. A copy of the approved notice of intent to drill ***shall be*** posted on each drilling rig;
3. The minimum amount of surface pipe as specified below ***shall be set*** by circulating cement to the top; in all cases surface pipe ***shall be set*** through all unconsolidated materials plus a minimum of 20 feet into the underlying formation.
4. If the well is dry hole, an agreement between the operator and the district office on plug length and placement is necessary ***prior to plugging;***
5. The appropriate district office will be notified before well is either plugged or production casing is cemented in;
6. If an ALTERNATE II COMPLETION, production pipe shall be cemented from below any usable water to surface within ***120 DAYS*** of spud date. Or pursuant to Appendix "B" - Eastern Kansas surface casing order #133,891-C, which applies to the KCC District 3 area, alternate II cementing must be completed within 30 days of the spud date or the well shall be plugged. ***In all cases, NOTIFY district office*** prior to any cementing.

Submitted Electronically

For KCC Use ONLY
API # 15 - 15-009-25919-00-00
Conductor pipe required 0 feet
Minimum surface pipe required 380 feet per ALT. [X] I [ ] II
Approved by: Rick Hestermann 12/16/2013
This authorization expires: 12/16/2014
(This authorization void if drilling not started within 12 months of approval date.)

Spud date: Agent:

Mail to: KCC - Conservation Division,
130 S. Market - Room 2078, Wichita, Kansas 67202

Remember to:

- File Certification of Compliance with the Kansas Surface Owner Notification Act (KSONA-1) with Intent to Drill;
- File Drill Pit Application (form CDP-1) with Intent to Drill;
- File Completion Form ACO-1 within 120 days of spud date;
- File acreage attribution plat according to field proration orders;
- Notify appropriate district office 48 hours prior to workover or re-entry;
- Submit plugging report (CP-4) after plugging is completed (within 60 days);
- Obtain written approval before disposing or injecting salt water.
- If well will not be drilled or permit has expired (See: authorized expiration date) please check the box below and return to the address below.

[ ] **Well will not be drilled or Permit Expired** Date:
Signature of Operator or Agent:

8 17 14 [ ] E [X] W

Side Two

1173075

For KCC Use ONLY
API # 15 - 15-009-25919-00-00

IN ALL CASES PLOT THE INTENDED WELL ON THE PLAT BELOW

In all cases, please fully complete this side of the form. Include items 1 through 5 at the bottom of this page.

Operator: Mai Oil Operations, Inc.
Lease: B. Axman
Well Number: 1
Field: Capital View

Number of Acres attributable to well: _____
QTR/QTR/QTR/QTR of acreage: _____ - SE - SW - SW

Location of Well: County: Barton
330 feet from ☐ N / ☒ S Line of Section
990 feet from ☐ E / ☒ W Line of Section
Sec. 8 Twp. 17 S. R. 14 ☐ E ☒ W

Is Section: ☒ Regular or ☐ Irregular

If Section is Irregular, locate well from nearest corner boundary.
Section corner used: ☐ NE ☐ NW ☐ SE ☐ SW

PLAT

Show location of the well. Show footage to the nearest lease or unit boundary line. Show the predicted locations of lease roads, tank batteries, pipelines and electrical lines, as required by the Kansas Surface Owner Notice Act (House Bill 2032). You may attach a separate plat if desired.

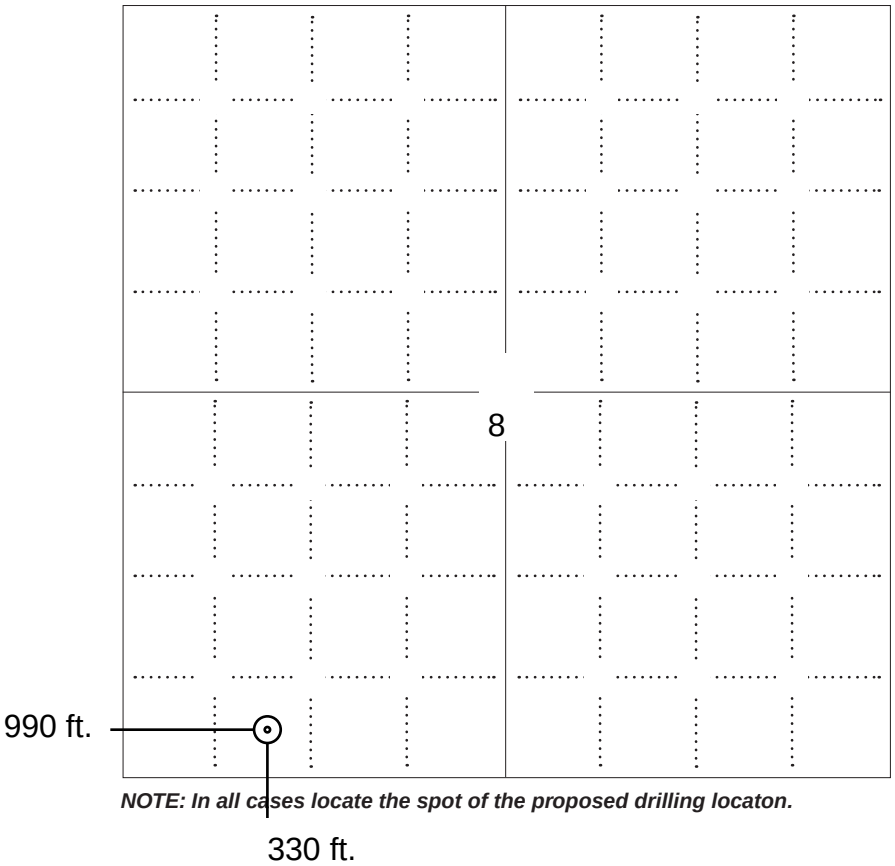

NOTE: In all cases locate the spot of the proposed drilling locaton.

LEGEND

- ○ Well Location
- ▭ Tank Battery Location
- —— Pipeline Location
- - - - - - Electric Line Location
- ▬ Lease Road Location

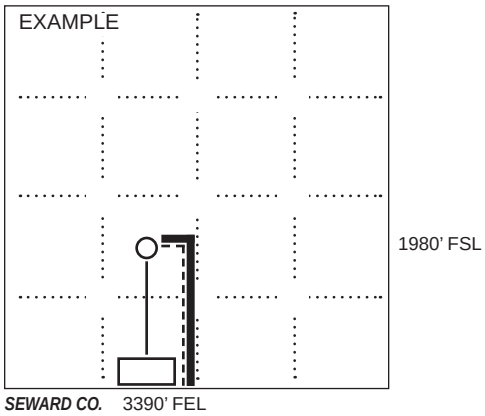

In plotting the proposed location of the well, *you must show*:

1. The manner in which you are using the depicted plat by identifying section lines, i.e. 1 section, 1 section with 8 surrounding sections, 4 sections, etc.
2. The distance of the proposed drilling location from the south / north and east / west outside section lines.
3. The distance to the nearest lease or unit boundary line (in footage).
4. If proposed location is located within a prorated or spaced field a certificate of acreage attribution plat must be attached: (C0-7 for oil wells; CG-8 for gas wells).
5. The predicted locations of lease roads, tank batteries, pipelines, and electrical lines.

1173075

KANSAS CORPORATION COMMISSION
OIL & GAS CONSERVATION DIVISION

Form CDP-1
May 2010
Form must be Typed

APPLICATION FOR SURFACE PIT

Submit in Duplicate

Operator Name: Mai Oil Operations, Inc.
License Number: 5259

Operator Address: 8411 PRESTON RD STE 800 DALLAS TX 75225

Contact Person: Allen Bangert
Phone Number: 214-219-8883

Lease Name & Well No.: B. Axman 1

Pit Location (QQQQ): ____ - SE - SW - SW

Sec. 8 Twp. 17 R. 14 ☐ East ☒ West

330 Feet from ☐ North / ☒ South Line of Section

990 Feet from ☐ East / ☒ West Line of Section

Barton County

Type of Pit:
☐ Emergency Pit ☐ Burn Pit
☐ Settling Pit ☒ Drilling Pit
☐ Workover Pit ☐ Haul-Off Pit
(If WP Supply API No. or Year Drilled)

Pit is:
☒ Proposed ☐ Existing
If Existing, date constructed:
Pit capacity: 3000 (bbls)

Is the pit located in a Sensitive Ground Water Area? ☐ Yes ☒ No

Chloride concentration: ____ mg/l
(For Emergency Pits and Settling Pits only)

Is the bottom below ground level? ☒ Yes ☐ No

Artificial Liner? ☐ Yes ☒ No

How is the pit lined if a plastic liner is not used?
clay soil and drilling mud

Pit dimensions (all but working pits): 75 Length (feet) 75 Width (feet) ☐ N/A: Steel Pits

Depth from ground level to deepest point: 3 (feet) ☐ No Pit

If the pit is lined give a brief description of the liner material, thickness and installation procedure.

Describe procedures for periodic maintenance and determining liner integrity, including any special monitoring.

Distance to nearest water well within one-mile of pit:
106 feet Depth of water well 116 feet

Depth to shallowest fresh water 40 feet.
Source of information:
☐ measured ☐ well owner ☐ electric log ☒ KDWR

Emergency, Settling and Burn Pits ONLY:

Producing Formation:

Number of producing wells on lease:

Barrels of fluid produced daily:

Does the slope from the tank battery allow all spilled fluids to flow into the pit? ☐ Yes ☐ No

Drilling, Workover and Haul-Off Pits ONLY:

Type of material utilized in drilling/workover: drilling mud

Number of working pits to be utilized: 3

Abandonment procedure: Let dry and backfill

Drill pits must be closed within 365 days of spud date.

Submitted Electronically

KCC OFFICE USE ONLY

☐ Liner ☐ Steel Pit ☐ RFAC ☐ RFAS

Date Received: 12/16/2013 Permit Number: 15-009-25919-00-00 Permit Date: 12/16/2013 Lease Inspection: ☐ Yes ☒ No

Mail to: KCC - Conservation Division, 130 S. Market - Room 2078, Wichita, Kansas 67202

[redacted]

KANSAS CORPORATION COMMISSION 1173075
OIL & GAS CONSERVATION DIVISION

Form KSONA-1
July 2010
Form Must Be Typed
Form must be Signed
All blanks must be Filled

CERTIFICATION OF COMPLIANCE WITH THE KANSAS SURFACE OWNER NOTIFICATION ACT

This form must be submitted with all Forms C-1 (Notice of Intent to Drill); CB-1 (Cathodic Protection Borehole Intent); T-1 (Request for Change of Operator Transfer of Injection or Surface Pit Permit); and CP-1 (Well Plugging Application). Any such form submitted without an accompanying Form KSONA-1 will be returned.

Select the corresponding form being filed: ☒ **C-1** (Intent) ☐ **CB-1** (Cathodic Protection Borehole Intent) ☐ **T-1** (Transfer) ☐ **CP-1** (Plugging Application)

OPERATOR: License # 5259
Name: Mai Oil Operations, Inc.
Address 1: 8411 PRESTON RD STE 800
Address 2:
City: DALLAS State: TX Zip: 75225 + 5520
Contact Person: Allen Bangert
Phone: (785) 483-1676 Fax: ( )
Email Address:

Well Location:
__-SE-SW-SW Sec. 8 Twp. 17 S. R. 14 ☐ East ☒ West
County: Barton
Lease Name: B. Axman Well #: 1

If filing a Form T-1 for multiple wells on a lease, enter the legal description of the lease below:

Surface Owner Information:
Name: Beatrice Axman
Address 1: P. O. Box 162
Address 2:
City: Olmitz State: Ks. Zip: 67564 +

When filing a Form T-1 involving multiple surface owners, attach an additional sheet listing all of the information to the left for each surface owner. Surface owner information can be found in the records of the register of deeds for the county, and in the real estate property tax records of the county treasurer.

If this form is being submitted with a Form C-1 (Intent) or CB-1 (Cathodic Protection Borehole Intent), you must supply the surface owners and the KCC with a plat showing the predicted locations of lease roads, tank batteries, pipelines, and electrical lines. The locations shown on the plat are preliminary non-binding estimates. The locations may be entered on the Form C-1 plat, Form CB-1 plat, or a separate plat may be submitted.

Select one of the following:

☒ I certify that, pursuant to the Kansas Surface Owner Notice Act (House Bill 2032), I have provided the following to the surface owner(s) of the land upon which the subject well is or will be located: 1) a copy of the Form C-1, Form CB-1, Form T-1, or Form CP-1 that I am filing in connection with this form; 2) if the form being filed is a Form C-1 or Form CB-1, the plat(s) required by this form; and 3) my operator name, address, phone number, fax, and email address.

☐ I have not provided this information to the surface owner(s). I acknowledge that, because I have not provided this information, the KCC will be required to send this information to the surface owner(s). To mitigate the additional cost of the KCC performing this task, I acknowledge that I am being charged a $30.00 handling fee, payable to the KCC, which is enclosed with this form.

If choosing the second option, submit payment of the $30.00 handling fee with this form. If the fee is not received with this form, the KSONA-1 form and the associated Form C-1, Form CB-1, Form T-1, or Form CP-1 will be returned.

Submitted Electronically

Mail to: KCC - Conservation Division, 130 S. Market - Room 2078, Wichita, Kansas 67202

For KCC Use ONLY
API # 15 - _____

IN ALL CASES PLOT THE INTENDED WELL ON THE PLAT BELOW

In all cases, please fully complete this side of the form. Include items 1 through 5 at the bottom of this page.

Operator: Mai Oil Operations, Inc.
Lease: B. Axman
Well Number: 1
Field: _____

Number of Acres attributable to well: _____
QTR/QTR/QTR/QTR of acreage: _____ - _____ - _____ - _____

Location of Well: County: Barton
330 feet from ☐ N / ☒ S Line of Section
990 feet from ☐ E / ☒ W Line of Section
Sec. 8 Twp. 17 S. R. 14 ☐ E ☒ W

Is Section: ☒ Regular or ☐ Irregular

If Section is Irregular, locate well from nearest corner boundary.
Section corner used: ☐ NE ☐ NW ☐ SE ☐ SW

PLAT

Show location of the well. Show footage to the nearest lease or unit boundary line. Show the predicted locations of lease roads, tank batteries, pipelines and electrical lines, as required by the Kansas Surface Owner Notice Act (House Bill 2032). You may attach a separate plat if desired.

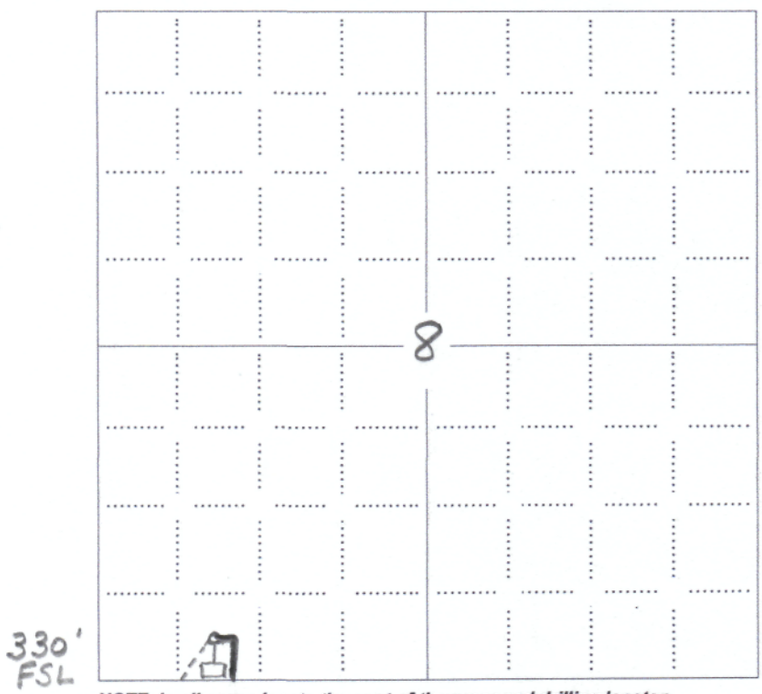

LEGEND

- ○ Well Location
- ▭ Tank Battery Location
- —— Pipeline Location
- - - - - - Electric Line Location
- ▬ Lease Road Location

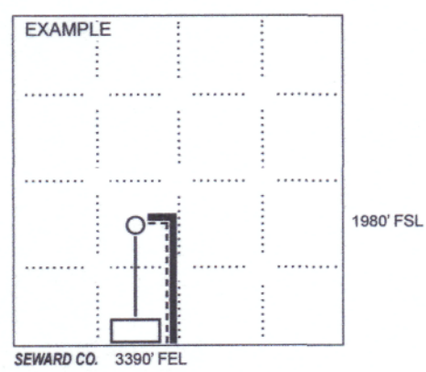

NOTE: In all cases locate the spot of the proposed drilling locaton.
990' FWL

In plotting the proposed location of the well, *you must show*:

1. The manner in which you are using the depicted plat by identifying section lines, i.e. 1 section, 1 section with 8 surrounding sections, 4 sections, etc.
2. The distance of the proposed drilling location from the south / north and east / west outside section lines.
3. The distance to the nearest lease or unit boundary line (in footage).
4. If proposed location is located within a prorated or spaced field a certificate of acreage attribution plat must be attached: (C0-7 for oil wells; CG-8 for gas wells).
5. The predicted locations of lease roads, tank batteries, pipelines, and electrical lines.