1203491

For KCC Use:
Effective Date: 05/12/2014
District # 3
SGA? [ ] Yes [X] No

KANSAS CORPORATION COMMISSION
OIL & GAS CONSERVATION DIVISION

Form C-1
March 2010
Form must be Typed
Form must be Signed
All blanks must be Filled

NOTICE OF INTENT TO DRILL

Must be approved by KCC five (5) days prior to commencing well

Form KSONA-1, Certification of Compliance with the Kansas Surface Owner Notification Act, MUST be submitted with this form.

Expected Spud Date: 6/2/2014 (month day year)

OPERATOR: License# 34592
Name: Kansas Resource Exploration & Development, LLC
Address 1: 9393 W 110TH ST, STE 500
Address 2:
City: OVERLAND PARK State: KS Zip: 66210 + _ _ _ _
Contact Person: Bradley Kramer
Phone: 913-451-6758

CONTRACTOR: License#
Name: Advise on ACO-1 -- Must be licensed by KCC

Well Drilled For:	*Well Class:*	*Type Equipment:*
[ ] Oil	[X] Enh Rec	[X] Mud Rotary
[ ] Gas	[ ] Storage	[ ] Air Rotary
	[ ] Disposal	[ ] Cable
[ ] Seismic ; ____ # of Holes	[ ] Infield	
	[ ] Pool Ext.	
	[ ] Wildcat	
	[ ] Other	

[ ] Other:

[ ] If OWWO: old well information as follows:

Operator:
Well Name:
Original Completion Date: Original Total Depth:

Directional, Deviated or Horizontal wellbore? [ ] Yes [X] No
If Yes, true vertical depth:
Bottom Hole Location:
KCC DKT #:

Spot Description:
NE - NW - NW - NW (Q/Q/Q/Q) Sec. 24 Twp. 17 S. R. 22 [X] E [ ] W
4975 feet from [ ] N / [X] S Line of Section
4680 feet from [X] E / [ ] W Line of Section
Is SECTION: [X] Regular [ ] Irregular?

*(**Note:** Locate well on the Section Plat on reverse side)*

County: Miami
Lease Name: Doherty Well #: KRI-2
Field Name: Paola-Rantoul
Is this a Prorated / Spaced Field? [ ] Yes [X] No
Target Formation(s): Cattleman
Nearest Lease or unit boundary line (in footage): 305
Ground Surface Elevation: 956 Estimated feet MSL
Water well within one-quarter mile: [ ] Yes [X] No
Public water supply well within one mile: [ ] Yes [X] No
Depth to bottom of fresh water: 100
Depth to bottom of usable water: 200
Surface Pipe by Alternate: [ ] I [X] II
Length of Surface Pipe Planned to be set: 20
Length of Conductor Pipe (if any):
Projected Total Depth: 800
Formation at Total Depth: Cattleman
Water Source for Drilling Operations:
[ ] Well [X] Farm Pond [ ] Other:
DWR Permit #:
*(**Note:** Apply for Permit with DWR [ ])*
Will Cores be taken? [ ] Yes [X] No
If Yes, proposed zone:

AFFIDAVIT

The undersigned hereby affirms that the drilling, completion and eventual plugging of this well will comply with K.S.A. 55 et. seq.

It is agreed that the following minimum requirements will be met:

1. Notify the appropriate district office ***prior*** to spudding of well;
2. A copy of the approved notice of intent to drill ***shall be*** posted on each drilling rig;
3. The minimum amount of surface pipe as specified below ***shall be set*** by circulating cement to the top; in all cases surface pipe ***shall be set*** through all unconsolidated materials plus a minimum of 20 feet into the underlying formation.
4. If the well is dry hole, an agreement between the operator and the district office on plug length and placement is necessary ***prior to plugging;***
5. The appropriate district office will be notified before well is either plugged or production casing is cemented in;
6. If an ALTERNATE II COMPLETION, production pipe shall be cemented from below any usable water to surface within ***120 DAYS*** of spud date. Or pursuant to Appendix "B" - Eastern Kansas surface casing order #133,891-C, which applies to the KCC District 3 area, alternate II cementing must be completed within 30 days of the spud date or the well shall be plugged. ***In all cases, NOTIFY district office*** prior to any cementing.

Submitted Electronically

For KCC Use ONLY
API # 15 - 15-121-30353-00-00
Conductor pipe required 0 feet
Minimum surface pipe required 20 feet per ALT. [ ] I [X] II
Approved by: Rick Hestermann 05/07/2014
This authorization expires: 05/07/2015
(This authorization void if drilling not started within 12 months of approval date.)

Spud date: Agent:

Mail to: KCC - Conservation Division,
130 S. Market - Room 2078, Wichita, Kansas 67202

Remember to:

- File Certification of Compliance with the Kansas Surface Owner Notification Act (KSONA-1) with Intent to Drill;
- File Drill Pit Application (form CDP-1) with Intent to Drill;
- File Completion Form ACO-1 within 120 days of spud date;
- File acreage attribution plat according to field proration orders;
- Notify appropriate district office 48 hours prior to workover or re-entry;
- Submit plugging report (CP-4) after plugging is completed (within 60 days);
- Obtain written approval before disposing or injecting salt water.
- If well will not be drilled or permit has expired (See: authorized expiration date) please check the box below and return to the address below.

[ ] **Well will not be drilled or Permit Expired** Date:
Signature of Operator or Agent:

24 17 22 [X] E [ ] W

Side Two

1203491

For KCC Use ONLY
API # 15 - 15-121-30353-00-00

IN ALL CASES PLOT THE INTENDED WELL ON THE PLAT BELOW

In all cases, please fully complete this side of the form. Include items 1 through 5 at the bottom of this page.

Operator: Kansas Resource Exploration & Development, LLC
Lease: Doherty
Well Number: KRI-2
Field: Paola-Rantoul

Number of Acres attributable to well: _____
QTR/QTR/QTR/QTR of acreage: NE - NW - NW - NW

Location of Well: County: Miami
4975 feet from ☐ N / ☒ S Line of Section
4680 feet from ☒ E / ☐ W Line of Section
Sec. 24 Twp. 17 S. R. 22 ☒ E ☐ W

Is Section: ☒ Regular or ☐ Irregular

If Section is Irregular, locate well from nearest corner boundary.
Section corner used: ☐ NE ☐ NW ☐ SE ☐ SW

PLAT

Show location of the well. Show footage to the nearest lease or unit boundary line. Show the predicted locations of lease roads, tank batteries, pipelines and electrical lines, as required by the Kansas Surface Owner Notice Act (House Bill 2032). You may attach a separate plat if desired.

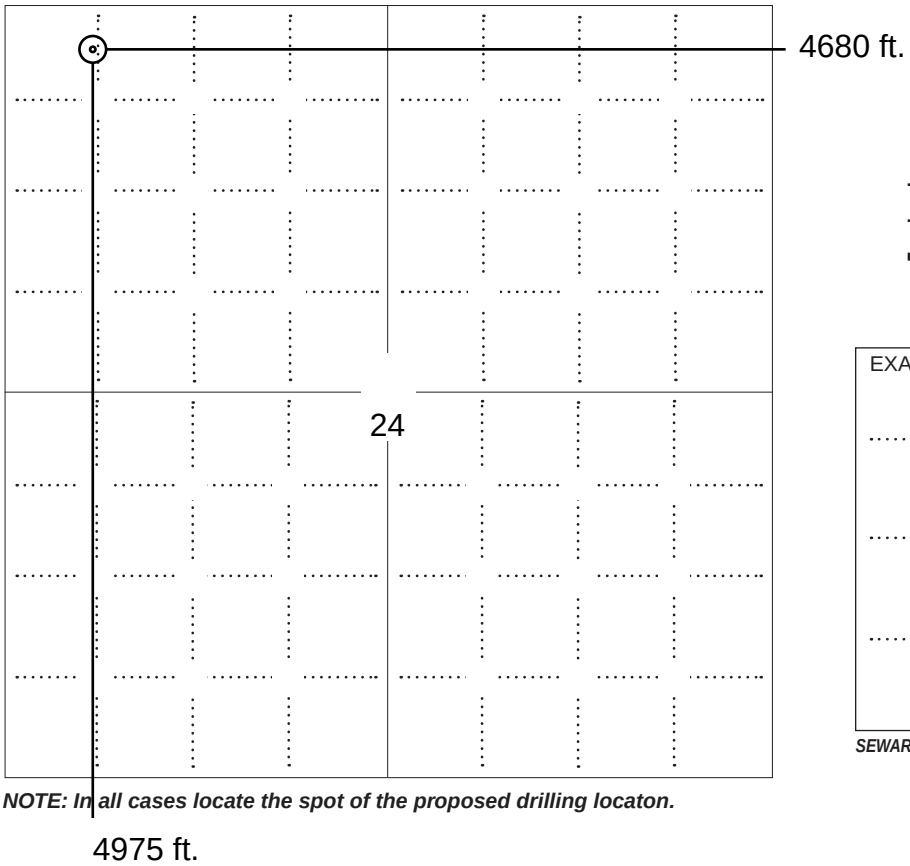

LEGEND

- ○ Well Location
- ▭ Tank Battery Location
- —— Pipeline Location
- - - - - - Electric Line Location
- ▬ Lease Road Location

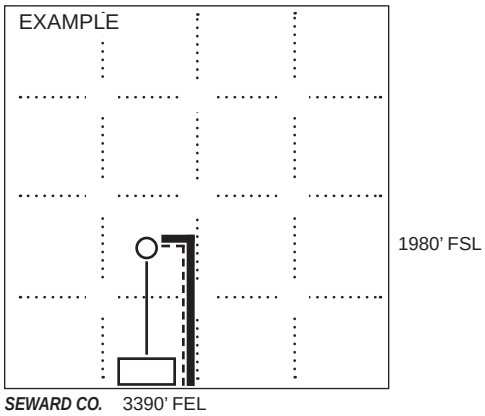

NOTE: In all cases locate the spot of the proposed drilling locaton.

In plotting the proposed location of the well, *you must show*:

1. The manner in which you are using the depicted plat by identifying section lines, i.e. 1 section, 1 section with 8 surrounding sections, 4 sections, etc.
2. The distance of the proposed drilling location from the south / north and east / west outside section lines.
3. The distance to the nearest lease or unit boundary line (in footage).
4. If proposed location is located within a prorated or spaced field a certificate of acreage attribution plat must be attached: (C0-7 for oil wells; CG-8 for gas wells).
5. The predicted locations of lease roads, tank batteries, pipelines, and electrical lines.

1203491

KANSAS CORPORATION COMMISSION
OIL & GAS CONSERVATION DIVISION

Form CDP-1
May 2010
Form must be Typed

APPLICATION FOR SURFACE PIT

Submit in Duplicate

Operator Name: Kansas Resource Exploration & Development, LLC | License Number: 34592

Operator Address: 9393 W 110TH ST, STE 500 OVERLAND PARK KS 66210

Contact Person: Bradley Kramer | Phone Number: 913-451-6758

Lease Name & Well No.: Doherty KRI-2

Pit Location (QQQQ): NE - NW - NW - NW

Sec. 24 Twp. 17 R. 22 [X] East [ ] West

4975 Feet from [ ] North / [X] South Line of Section

4680 Feet from [X] East / [ ] West Line of Section

Miami County

Type of Pit:
[ ] Emergency Pit [ ] Burn Pit
[ ] Settling Pit [X] Drilling Pit
[ ] Workover Pit [ ] Haul-Off Pit
(If WP Supply API No. or Year Drilled)

Pit is:
[X] Proposed [ ] Existing
If Existing, date constructed:
Pit capacity: 128 (bbls)

Is the pit located in a Sensitive Ground Water Area? [ ] Yes [X] No

Chloride concentration: _____ mg/l
(For Emergency Pits and Settling Pits only)

Is the bottom below ground level? [X] Yes [ ] No

Artificial Liner? [ ] Yes [X] No

How is the pit lined if a plastic liner is not used?
Native Mud

Pit dimensions (all but working pits): 12 Length (feet) 12 Width (feet) [ ] N/A: Steel Pits

Depth from ground level to deepest point: 5 (feet) [ ] No Pit

If the pit is lined give a brief description of the liner material, thickness and installation procedure.

Describe procedures for periodic maintenance and determining liner integrity, including any special monitoring.

Distance to nearest water well within one-mile of pit:
N/A feet Depth of water well _____ feet

Depth to shallowest fresh water _____ feet.
Source of information:
[ ] measured [ ] well owner [ ] electric log [ ] KDWR

Emergency, Settling and Burn Pits ONLY:

Producing Formation: _____

Number of producing wells on lease: _____

Barrels of fluid produced daily: _____

Does the slope from the tank battery allow all spilled fluids to flow into the pit? [ ] Yes [ ] No

Drilling, Workover and Haul-Off Pits ONLY:

Type of material utilized in drilling/workover: Drilling Mud

Number of working pits to be utilized: 2

Abandonment procedure: Air dry & Backfill

Drill pits must be closed within 365 days of spud date.

Submitted Electronically

KCC OFFICE USE ONLY

[ ] Liner [ ] Steel Pit [X] RFAC [ ] RFAS

Date Received: 05/07/2014 Permit Number: 15-121-30353-00-00 Permit Date: 05/07/2014 Lease Inspection: [X] Yes [ ] No

Mail to: KCC - Conservation Division, 130 S. Market - Room 2078, Wichita, Kansas 67202

[redacted]

1203491

KANSAS CORPORATION COMMISSION
OIL & GAS CONSERVATION DIVISION

Form KSONA-1
January 2014
Form Must Be Typed
Form must be Signed
All blanks must be Filled

CERTIFICATION OF COMPLIANCE WITH THE KANSAS SURFACE OWNER NOTIFICATION ACT

This form must be submitted with all Forms C-1 (Notice of Intent to Drill); CB-1 (Cathodic Protection Borehole Intent); T-1 (Request for Change of Operator Transfer of Injection or Surface Pit Permit); and CP-1 (Well Plugging Application). Any such form submitted without an accompanying Form KSONA-1 will be returned.

Select the corresponding form being filed: ☒ **C-1** (Intent) ☐ **CB-1** (Cathodic Protection Borehole Intent) ☐ **T-1** (Transfer) ☐ **CP-1** (Plugging Application)

OPERATOR: License # 34592
Name: Kansas Resource Exploration & Development, LLC
Address 1: 9393 W 110TH ST, STE 500
Address 2:
City: OVERLAND PARK State: KS Zip: 66210 + _ _ _ _
Contact Person: Bradley Kramer
Phone: (913) 451-6758 Fax: ( )
Email Address:

Well Location:
NE - NW - NW - NW Sec. 24 Twp. 17 S. R. 22 ☒ East ☐ West
County: Miami
Lease Name: Doherty Well #: KRI-2

If filing a Form T-1 for multiple wells on a lease, enter the legal description of the lease below:

Surface Owner Information:
Name: JST Enterprises
Address 1: 16205 W. 287th St.
Address 2:
City: Paola State: Kansas Zip: 66071 + _ _ _ _

When filing a Form T-1 involving multiple surface owners, attach an additional sheet listing all of the information to the left for each surface owner. Surface owner information can be found in the records of the register of deeds for the county, and in the real estate property tax records of the county treasurer.

If this form is being submitted with a Form C-1 (Intent) or CB-1 (Cathodic Protection Borehole Intent), you must supply the surface owners and the KCC with a plat showing the predicted locations of lease roads, tank batteries, pipelines, and electrical lines. The locations shown on the plat are preliminary non-binding estimates. The locations may be entered on the Form C-1 plat, Form CB-1 plat, or a separate plat may be submitted.

Select one of the following:

☒ I certify that, pursuant to the Kansas Surface Owner Notice Act (House Bill 2032), I have provided the following to the surface owner(s) of the land upon which the subject well is or will be located: 1) a copy of the Form C-1, Form CB-1, Form T-1, or Form CP-1 that I am filing in connection with this form; 2) if the form being filed is a Form C-1 or Form CB-1, the plat(s) required by this form; and 3) my operator name, address, phone number, fax, and email address.

☐ I have not provided this information to the surface owner(s). I acknowledge that, because I have not provided this information, the KCC will be required to send this information to the surface owner(s). To mitigate the additional cost of the KCC performing this task, I acknowledge that I must provide the name and address of the surface owner by filling out the top section of this form and that I am being charged a $30.00 handling fee, payable to the KCC, which is enclosed with this form.

If choosing the second option, submit payment of the $30.00 handling fee with this form. If the fee is not received with this form, the KSONA-1 form and the associated Form C-1, Form CB-1, Form T-1, or Form CP-1 will be returned.

Submitted Electronically

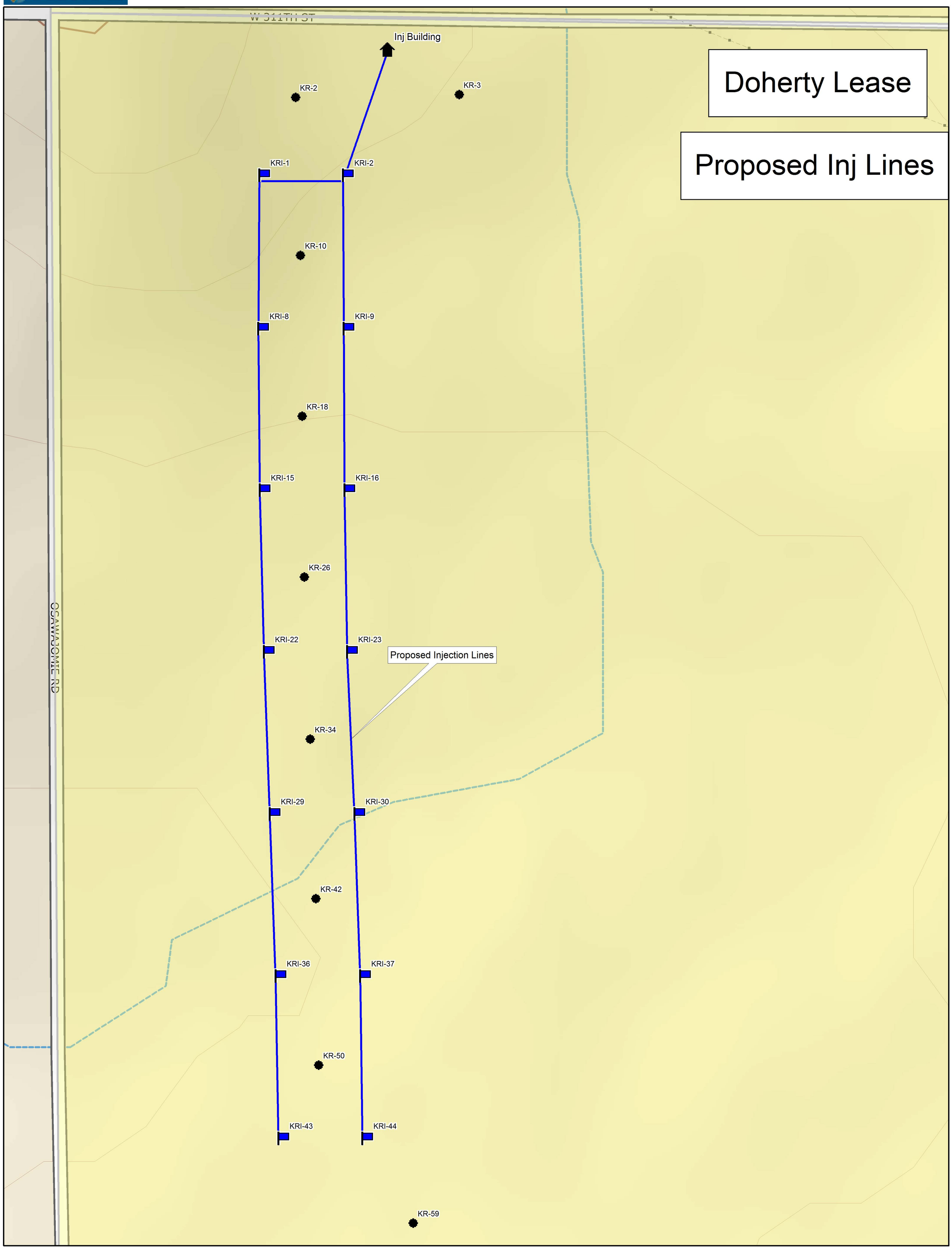

Data use subject to license.
© DeLorme. XMap® 7.
www.delorme.com

MN (2.2° E)

0 100 200 300 400 500 ft

Data Zoom 16-0

Conservation Division
Finney State Office Building
130 S. Market, Rm. 2078
Wichita, KS 67202-3802

Kansas
Corporation Commission

Phone: 316-337-6200
Fax: 316-337-6211
http://kcc.ks.gov/

Shari Feist Albrecht, Chair
Jay Scott Emler, Commissioner
Pat Apple, Commissioner

Sam Brownback, Governor

NOTICE TO OPERATORS FILING INTENT TO DRILL FOR DISPOSAL OR ENHANCED RECOVERY INJECTION WELLS, (CLASS II INJECTION WELL)

The attached approved Notice of Intent to Drill indicates the proposed well is to be used for injection. An approved "Intent to Drill" does not approve injection authority as a Class II Injection Well in Kansas.

Before any well is used for injection purposes, the operator must file an application for injection authority in accordance with K.A.R. 82-3-401 and provide notice in accordance with K.A.R. 82-3-402. The Conservation Division must issue a written permit granting the application before commencement of injection.

The Conservation Division requirements and restrictions associated with Class II Injection are identified in K.A.R. 82-3-400 et seq of our regulations. Associated regulations governing drilling,completion and injection applications may be found in K.A.R. 82-3-135, Table I, Table II, in the Cedar Hills Sandstone Moratorium, (Docket #156,397-C), and the Eastern Kansas Surface Casing Order, (Docket #133,891-C).

If you have questions regarding the approval of injection authority, an injection application may be filed as a "Design Approval" before actual drilling and completion of the well occurs. If you have any questions or concerns regarding Class II injection wells or regulations, call the Underground Injection Control Department at 316-337-6200.

Failure to obtain commission approval before beginning injection is punishable by a penalty, shut-in of the well or both.

Conservation Division
Finney State Office Building
130 S. Market, Rm. 2078
Wichita, KS 67202-3802

Kansas
Corporation Commission

Phone: 316-337-6200
Fax: 316-337-6211
http://kcc.ks.gov/

Shari Feist Albrecht, Chair
Jay Scott Emler, Commissioner
Pat Apple, Commissioner

Sam Brownback, Governor

May 07, 2014

Bradley Kramer
Kansas Resource Exploration & Development,
LLC
9393 W 110TH ST, STE 500
OVERLAND PARK, KS 66210

Re: Drilling Pit Application
Doherty KRI-2
NW/4 Sec.24-17S-22E
Miami County, Kansas

Dear Bradley Kramer:

District staff has inspected the above referenced location and has determined that the reserve pit shall be constructed **without slots**, the bottom shall be flat and reasonably level, and the free fluids must be removed. The fluids are to be removed from the reserve pit as soon as practical after drilling operations have ceased.

If production casing is set all completion fluids shall be removed from the working pits daily. NO completion fluids or non-exempt wastes shall be placed in the reserve pit.

The fluids should be taken to an authorized disposal well. Please file form CDP-5, Exploration and Production Waste Transfer, through KOLAR within 30 days of fluid removal.

A copy of this letter should be posted in the doghouse along with the approved Intent to Drill. If you have any questions or concerns please feel free to contact the District Office at (620) 432-2300.