**For KCC Use:**
Effective Date: 02/02/2022
District # 1
SGA? ☐ Yes ☑ No

KANSAS CORPORATION COMMISSION
OIL & GAS CONSERVATION DIVISION

**Form CB-1**
Oct 2016
**Form must be Typed**
**Form must be Signed**
**All blanks must be Filled**

# CATHODIC PROTECTION BOREHOLE INTENT

*Must be approved by the KCC sixty (60) days prior to commencing well.*
***Form KSONA-1, Certification of Compliance with the Kansas Surface Owner Notification Act, MUST be submitted with this form.***

Expected Spud Date: 3/4/2022 (month day year)

OPERATOR: License# 33883
Name: Magellan Pipeline Company LP
Address 1: 1 WILLIAMS CTR OTC-9
Address 2:
City: TULSA State: OK Zip: 74172 + _ _ _ _
Contact Person: TYLER KRAUS
Phone: 918-574-7336

CONTRACTOR: License# 848
Name: 3-B Drilling
Type Drilling Equipment: ☑ Mud Rotary ☐ Cable ☐ Air Rotary ☐ Other

**Construction Features**
Length of Cathodic Surface *(Non-Metallic)* Casing Planned to be set: 20 feet
Length of Conductor pipe *(if any)*: 0 feet
Surface casing borehole size: 16 inches
Cathodic surface casing size: 10 inches
Cathodic surface casing centralizers set at depths of: 10 ; _____ ; _____ ; _____ ; _____ ; _____ ; _____ ; _____ ; _____ ; _____ ;
Cathodic surface casing will terminate at:
☑ Above surface ☐ Surface Vault ☐ Below Surface Vault
Pitless casing adaptor will be used: ☑ Yes ☐ No Depth 3 feet
Anode installation depths are: Attached ; _____ ; _____ ; _____ ; _____ ; _____ ; _____ ; _____ ; _____ ; _____ ; _____ ; _____ ;

Spot Description:
SW - SW - SW - NW (Q/Q/Q/Q) Sec. 22 Twp. 19 S. R. 26 ☐ E ☑ W
2445 feet from ☑ N / ☐ S Line of Section
52 feet from ☐ E / ☑ W Line of Section
Is SECTION: ☑ Regular ☐ Irregular?
*(Check directions from nearest outside corner boundries)*
County: Ness
Facility Name: MP 187.89
Borehole Number: 1
Ground Surface Elevation: 2644 Estimated MSL
Cathodic Borehole Total Depth: 350 feet
Depth to Bedrock: 5 feet

**Water Information**
Aquifer Penetration: ☐ None ☑ Single ☐ Multiple
Depth to bottom of fresh water: 180
Depth to bottom of usable water: 1050
Water well within one-quarter mile: ☐ Yes ☑ No
Public water supply well within one mile: ☐ Yes ☑ No
Water Source for Drilling Operations:
☐ Well ☐ Farm Pond ☐ Stream ☑ Other
Water Well Location:
DWR Permit # Apply if needed.
Standard Dimension Ratio (SDR) is = 21
*(Cathodic surface csg. O.D. in inches / MWT in inches = SDR)*
Annular space between borehole and casing will be grouted with:
☐ Concrete ☐ Neat Cement ☐ Bentonite Cement ☑ Bentonite Clay
Anode vent pipe will be set at: 3 feet above surface
Anode conductor *(backfill)* material TYPE: PETROLEUM COKE
Depth of BASE of Backfill installation material: 350
Depth of TOP of Backfill installation material: 180
Borehole will be Pre-Plugged? ☐ Yes ☑ No

## AFFIDAVIT

The undersigned hereby affirms that the drilling, completion and eventual plugging of this well will comply with K.S.A. 55-101 et. seq.

It is agreed that the following minimum requirements will be met:

1. *Notify the appropriate District office prior to spudding and again before plugging the well. An agreement between the operator and the District Office on plugs and placement is necessary prior to plugging. In all cases, notify District Office prior to any grouting.*
2. *Notify appropriate District Office 48 hours prior to workover or re-entry.*
3. *A copy of the approved notice of intent to drill shall be posted on each drilling rig.*
4. *The minimum amount of cathodic surface casing as specified below shall be set by grouting to the top when the cathodic surface casing is set.*
5. *File all required forms: a. File Drill Pit Application (form CDP-1) with Intent to Drill (form CB-1). b. File Certification of Compliance with Kansas Surface Owner Notification Act (form KSONA-1) with Cathodic Protection Borehole Intent (CB-1) c. File Completion Form (ACO-1) within 60 days from spud date. d. Submit plugging report (CP-4) within 60 days after final plugging is completed.*

Submitted Electronically

**For KCC Use ONLY**
API # 15 - 15-135-26152-00-00
Conductor pipe required 0 feet
Minimum Cathodic Surface Casing Required: 20 feet
Approved by: CeLena Peterson 01/28/2022
**This authorization expires:** 01/28/2023
*(This authorization void if drilling not started within 12 months of approval date.)*

Spud date: _____ Agent: _____

*If this permit has expired or will not be drilled, check a box below, sign, date and return to the address below.*

☐ *Permit Expired* ☐ *Well Not Drilled*

*Date* *Signature of Operator or Agent*

22 19 26 ☐ E ☑ W

**Mail to: KCC - Conservation Division, 266 N Main St, Ste 220, Wichita, KS 67202-1513**

*Side Two*

**For KCC Use ONLY**
API # 15 - 15-135-26152-00-00

## IN ALL CASES, PLEASE FULLY COMPLETE THIS SIDE OF THE FORM.

In all cases, please fully complete this side of the form. Include items 1 through 3 at the bottom of this page.

Operator: Magellan Pipeline Company LP
Facility Name: MP 187.89
Borehole Number: 1

Location of Well: County: Ness
2445 feet from ☑ N / ☐ S Line of Section
52 feet from ☐ E / ☑ W Line of Section
Sec. 22 Twp. 19 S. R. 26 ☐ E ☑ W

Is Section: ☑ Regular or ☐ Irregular

**If Section is Irregular, locate well from nearest corner boundary.**
Section corner used: ☐ NE ☐ NW ☐ SE ☐ SW

### PLAT

*Show location of the Cathodic Borehole. Show footage to the nearest lease or unit boundary line. Show the predicted locations of lease roads, tank batteries, pipelines and electrical lines, as required by the Kansas Surface Owner Notice Act (House Bill 2032). You may attach a separate plat if desired.*

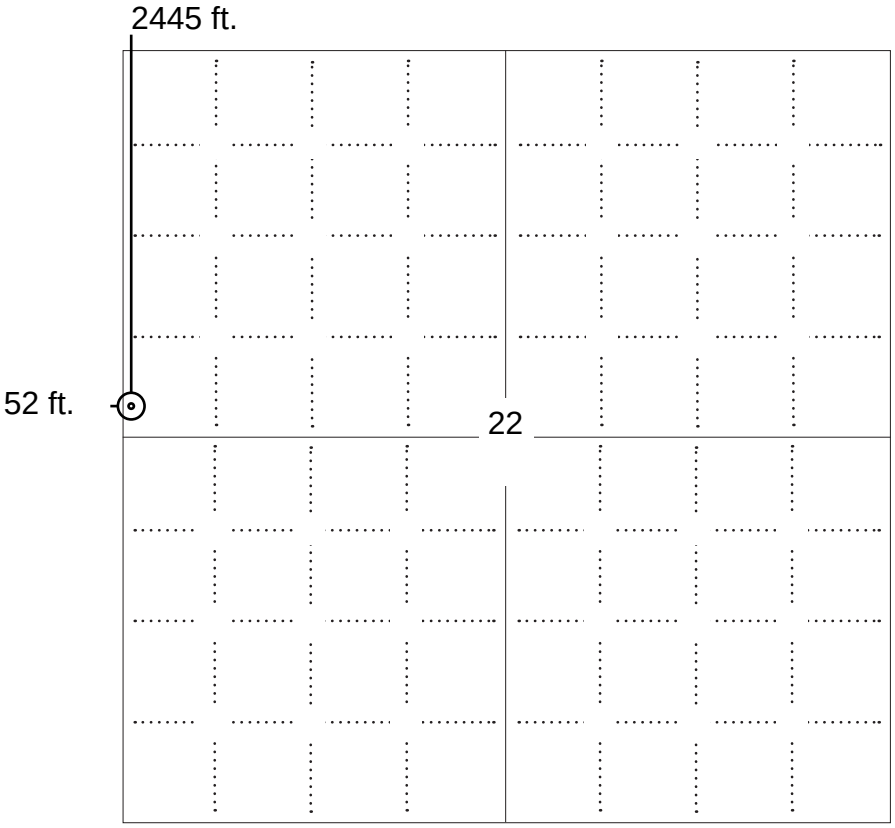


**LEGEND**

- Well Location
- Tank Battery Location
- Pipeline Location
- Electric Line Location
- Lease Road Location

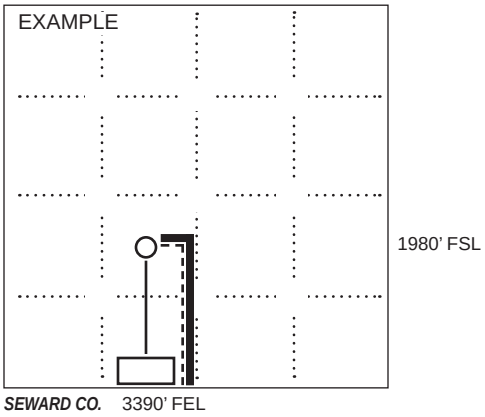


***NOTE: In all cases locate the spot of the proposed drilling locaton.***

**In plotting the proposed location of the well, *you must show:***

1. The manner in which you are using the depicted plat by identifying section lines, i.e. 1 section, 1 section with 8 surrounding sections, 4 sections, etc.;
2. The distance of the proposed drilling location from the section's south / north and east / west; line.
3. The predicted locations of lease roads, tank batteries, pipelines, and electrical lines.

KANSAS CORPORATION COMMISSION
OIL & GAS CONSERVATION DIVISION

Form CDP-1
July 2014
Form must be Typed

# APPLICATION FOR SURFACE PIT

*Submit in Duplicate*

Operator Name: Magellan Pipeline Company LP
License Number: 33883
Operator Address: 1 WILLIAMS CTR OTC-9 TULSA OK 74172
Contact Person: TYLER KRAUS
Phone Number: 918-574-7336
Lease Name & Well No.:

Type of Pit:
☐ Emergency Pit ☐ Burn Pit
☐ Settling Pit ☐ Drilling Pit
☐ Workover Pit ☐ Haul-Off Pit
*(If WP Supply API No. or Year Drilled)*

Pit is:
☐ Proposed ☐ Existing
If Existing, date constructed:
Pit capacity: (bbls)

Pit Location (QQQQ): SW - SW - SW - NW
Sec. 22 Twp. 19 R. 26 ☐ East ☐ West
2445 Feet from ☒ North / ☐ South Line of Section
52 Feet from ☐ East / ☒ West Line of Section
Ness County

Is the pit located in a Sensitive Ground Water Area? ☐ Yes ☒ No

Chloride concentration: mg/l
*(For Emergency Pits and Settling Pits only)*

Is the bottom below ground level? ☐ Yes ☐ No

Artificial Liner? ☐ Yes ☐ No

How is the pit lined if a plastic liner is not used?
ABOVE GROUND SHAKER SYSTEM

Pit dimensions (all but working pits): Length (feet) Width (feet) ☒ N/A: Steel Pits
Depth from ground level to deepest point: (feet) ☐ No Pit

If the pit is lined give a brief description of the liner material, thickness and installation procedure.
ABOVE GROUND METAL PIT

Describe procedures for periodic maintenance and determining liner integrity, including any special monitoring.
ABOVE GROUND PIT, NO MAINTENANCE NECESSARY

Distance to nearest water well within one-mile of pit:
feet Depth of water well feet

Depth to shallowest fresh water feet.
Source of information:
☐ measured ☐ well owner ☐ electric log ☐ KDWR

**Emergency, Settling and Burn Pits ONLY:**
Producing Formation:
Number of producing wells on lease:
Barrels of fluid produced daily:
Does the slope from the tank battery allow all spilled fluids to flow into the pit? ☐ Yes ☐ No

**Drilling, Workover and Haul-Off Pits ONLY:**
Type of material utilized in drilling/workover:
Number of working pits to be utilized:
Abandonment procedure:
Drill pits must be closed within 365 days of spud date.

Submitted Electronically

**KCC OFFICE USE ONLY**
☐ Liner ☒ Steel Pit ☒ RFAC ☐ RFAS
Date Received: 01/24/2022 Permit Number: 15-135-26152-00-00 Permit Date: 01/27/2022 Lease Inspection: ☐ Yes ☒ No

**Mail to: KCC - Conservation Division, 266 N Main St, Ste 220, Wichita, KS 67202-1513**

KANSAS CORPORATION COMMISSION
OIL & GAS CONSERVATION DIVISION

Form KSONA-1
July 2014
**Form Must Be Typed**
**Form must be Signed**
**All blanks must be Filled**

# CERTIFICATION OF COMPLIANCE WITH THE KANSAS SURFACE OWNER NOTIFICATION ACT

*This form must be submitted with all Forms C-1 (Notice of Intent to Drill); CB-1 (Cathodic Protection Borehole Intent); T-1 (Request for Change of Operator Transfer of Injection or Surface Pit Permit); and CP-1 (Well Plugging Application). Any such form submitted without an accompanying Form KSONA-1 will be returned.*

**Select the corresponding form being filed:** ☐ **C-1** (Intent) ☒ **CB-1** (Cathodic Protection Borehole Intent) ☐ **T-1** (Transfer) ☐ **CP-1** (Plugging Application)

OPERATOR: License # 33883
Name: Magellan Pipeline Company LP
Address 1: 1 WILLIAMS CTR OTC-9
Address 2:
City: TULSA State: OK Zip: 74172 + _ _ _ _
Contact Person: TYLER KRAUS
Phone: ( 918 ) 5747336 Fax: ( ) 
Email Address: Tyler.Kraus@magellanlp.com

Well Location:
SW - SW - SW - NW Sec. 22 Twp. 19 S. R. 26 ☐ East ☒ West
County: Ness
Lease Name: MP 187.89 Well #: 1

*If filing a Form T-1 for multiple wells on a lease, enter the legal description of the lease below:*

***Surface Owner Information:***
Name: TYLER KRAUS
Address 1: 1 WILLIAMS CTR OTC-9
Address 2:
City: TULSA State: OK Zip: 74172 + _ _ _ _

*When filing a Form T-1 involving multiple surface owners, attach an additional sheet listing all of the information to the left for each surface owner. Surface owner information can be found in the records of the register of deeds for the county, and in the real estate property tax records of the county treasurer.*

*If this form is being submitted with a Form C-1 (Intent) or CB-1 (Cathodic Protection Borehole Intent), you must supply the surface owners and the KCC with a plat showing the predicted locations of lease roads, tank batteries, pipelines, and electrical lines. The locations shown on the plat are preliminary non-binding estimates. The locations may be entered on the Form C-1 plat, Form CB-1 plat, or a separate plat may be submitted.*

***Select one of the following:***

☒ I certify that, pursuant to the Kansas Surface Owner Notice Act (House Bill 2032), I have provided the following to the surface owner(s) of the land upon which the subject well is or will be located: 1) a copy of the Form C-1, Form CB-1, Form T-1, or Form CP-1 that I am filing in connection with this form; 2) if the form being filed is a Form C-1 or Form CB-1, the plat(s) required by this form; and 3) my operator name, address, phone number, fax, and email address.

☐ I have not provided this information to the surface owner(s). I acknowledge that, because I have not provided this information, the KCC will be required to send this information to the surface owner(s). To mitigate the additional cost of the KCC performing this task, I acknowledge that I must provide the name and address of the surface owner by filling out the top section of this form and that I am being charged a $30.00 handling fee, payable to the KCC, which is enclosed with this form.

*If choosing the second option, submit payment of the $30.00 handling fee with this form. If the fee is not received with this form, the KSONA-1 form and the associated Form C-1, Form CB-1, Form T-1, or Form CP-1 will be returned.*

Submitted Electronically

| | |
|---|---|
| Form | CB1CDP1 - Cathodic Protection Borehole Intent |
| Operator | Magellan Pipeline Company LP |
| Well Name | MP 187.89 1 |
| Doc ID | 1612973 |

Anode Installation Depths

| Depth |
|---|
| 345 |
| 335 |
| 325 |
| 315 |
| 305 |
| 295 |
| 285 |
| 275 |
| 265 |
| 255 |
| 245 |
| 235 |
| 225 |
| 215 |
| 205 |

# CP INSTALLATION REQUEST

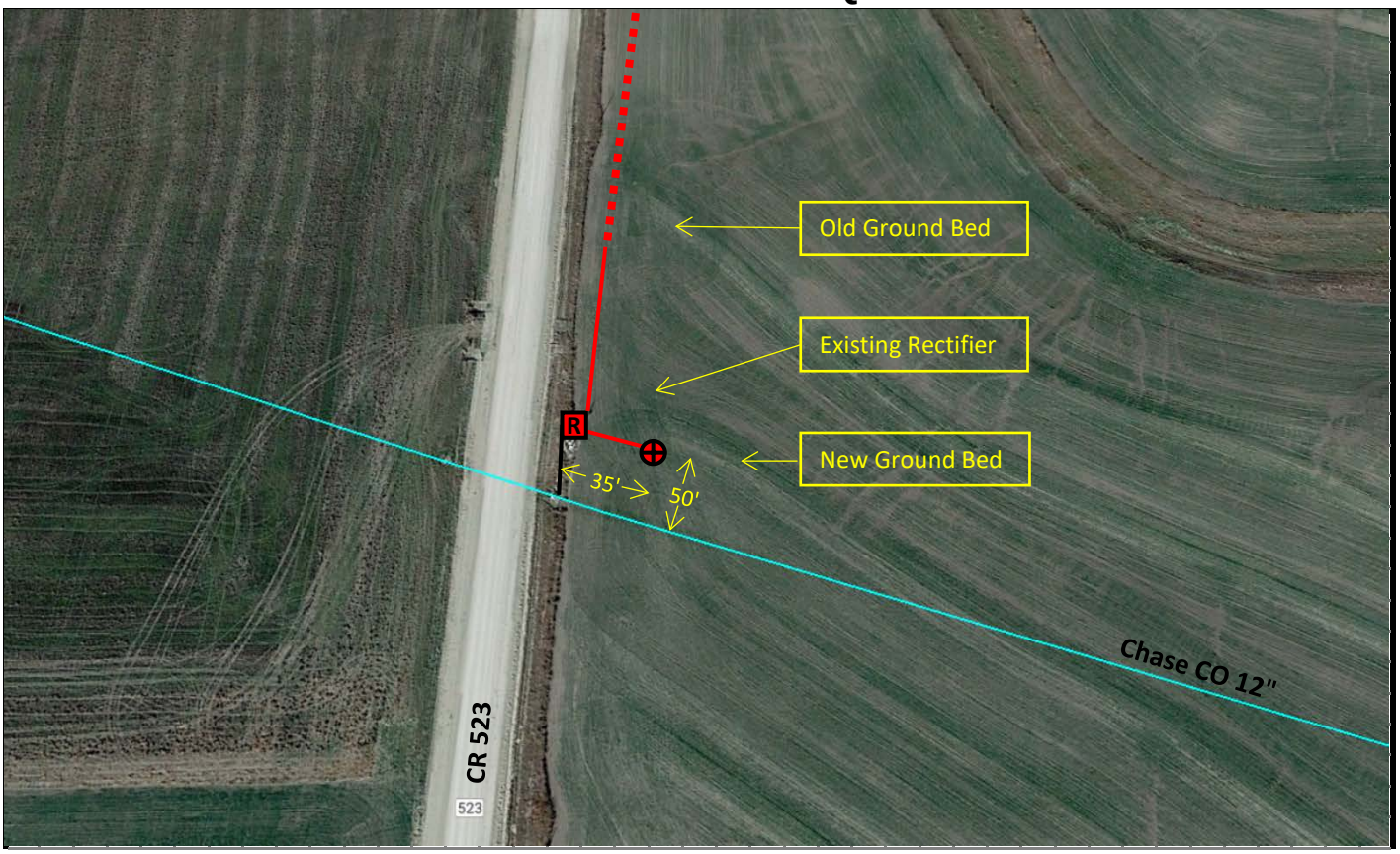


***LOCATION INFORMATION***

**Line Segment:** Chase CO 12" **MP:** 187.89 **ESN:** 9920+35 **Align Sheet:** 6912-AL-034 **Tract:** NE-7

**Legals:** SW 1/4 of NW 1/4 Sec. 22 T 19S R 26W **County/ST:** Ness County / Kansas

**Site Owner:** TBD **GPS Lat./Long:** 38.386109 / -100.189672 **Power Co.:** Lane-Scott Electric

**Site Directions:** From Hwy 96 / CR 523, travel South 4.5 miles to the marker on the East side of the road.

***PROJECT TYPE*** **(SEE JOB PLAN FOR WORK SCOPE)** **(1=✓ )**

**Asset Type:** ✓ Pipeline ☐ Tank ☐ Station ☐ Marine ☐ Other:

**Install Type:** ✓ Drilled GB ☐ Augured GB ☐ Horizontal GB ☐ Linear Trenched ☐ Linear HDD ☐ AC Mitigation

☐ New Installation ✓ Replacement ☐ Replaceable Anode System ☐ System Repair ☐ New Rectifier ☐ Rectifier Pole

☐ Power Pole & M-Loop ☐ Air Vac X ☐ Hydro Vac X ☐ Portable Pit ✓ Other: ******KCC Permit Required******

**Hole or Trench** 10 IN **X** 350 FT **Casing Qty:** 20 FT **Top of Coke to Surface:** 180 FT **Anode Centers:** 10 FT

**Backfill Below Anode:** 5 FT **Backfill Above Anode:** 20 FT **Anode Qty:** 15 EA/FT **GB to Rect:** 50 FT

**Pos Connections:** 1 Qty **Neg Cable to Rect:** 50 FT **Neg Connections:** 0 Qty **Total Neg cable** 0 FT

***MATERIAL SPECIFICATIONS***

**Anode:** Anotec 2660Z (2.7X60) **Anode Cable:** #8 Halar **Anode Backfill:** Loresco SC-3 **Annulas:** Bentonite

**Cable/Wire:** Postive Type #2 HMWPE Red Other: ☐ Coupon TS ___ Qty ☐ R-Cell ___ Qty

Negative Type N/A Other: ☐ Casing TS ___ Qty ☐ TS ___ Qty

**Rectifier:** N/A AC Input: N/A **RMU:** N/A ☐ ☐ Preinstalled

**P=C:** ___ **F:** **Q=:** N/A **Rect Pole Size:** N/A **Power Pole Size:** N/A

**Anode J-Box:** ✓ Galvanized ☐ Fiberglass **Shunt Type:** Agra JB .01 Common Lug 1 Qty ☐ Space for Resistors

**Neg J-Box** ☐ Galvanized ☐ Fiberglass **Shunt Type:** ___ Circuits ___ Qty ☐ Resistors ___ Qty ___

**Pos J-Box:** ☐ Galvanized ☐ Fiberglass **Shunt Type:** ___ Circuits ___ Qty ☐ Resistors ___ Qty ___

**NOTES/ADDITIONAL INFORMATION**

Drill a 10" x 350' hole, install 15 Anotec (2660Z 2.7X60) anodes on 10' centers, backfill with Loresco SC-3 coke breeze, and terminate all anode leads inside a galvanized junction box located at the rectifier. Tie the rectifier positive into the anode junction box with a #2 red HMWPE cable.

Conservation Division
266 N. Main St., Ste. 220
Wichita, KS 67202-1513

Kansas
Corporation Commission

Phone: 316-337-6200
Fax: 316-337-6211
http://kcc.ks.gov/

Dwight D. Keen, Chair
Susan K. Duffy, Commissioner
Andrew J. French, Commissioner

Laura Kelly, Governor

According to the drilling pit application, no earthen pits will be used at this location. Steel pits will be used. Please inform the Commission in writing as to which disposal well you utilized to dispose of the contents in the steel pits and the amount of fluid that was disposed. Please file form CDP-5, Exploration and Production Waste Transfer, within 30 days of fluid removal.

Should a haul-off pit be necessary please file form CDP-1, Application for Surface Pit, This location will have to be inspected prior to approval of the haul-off pit application.

**A copy of this letter should be posted in the doghouse along with the approved Intent to Drill.**