Confidentiality Requested:
☐ Yes ☑ No

KANSAS CORPORATION COMMISSION
OIL & GAS CONSERVATION DIVISION

Form ACO-1
January 2018
Form must be Typed
Form must be Signed
All blanks must be Filled

WELL COMPLETION FORM
WELL HISTORY - DESCRIPTION OF WELL & LEASE

OPERATOR: License # 34952
Name: Tallgrass Interstate Gas Transmission, LLC
Address 1: 3808 28TH AVE, STE B
Address 2:
City: KEARNEY State: NE Zip: 68845 + 1290
Contact Person: Cooper Taylor
Phone: (308) 865-0719
CONTRACTOR: License # 848
Name: 3-B Drilling
Wellsite Geologist: NA
Purchaser:

Designate Type of Completion:
☑ New Well ☐ Re-Entry ☐ Workover
☐ Oil ☐ WSW ☐ SWD
☐ Gas ☐ DH ☐ EOR
☐ OG ☐ GSW
☐ CM *(Coal Bed Methane)*
☑ Cathodic ☐ Other *(Core, Expl., etc.)*:

If Workover/Re-entry: Old Well Info as follows:
Operator:
Well Name:
Original Comp. Date: Original Total Depth:
☐ Deepening ☐ Re-perf. ☐ Conv. to EOR ☐ Conv. to SWD
☐ Plug Back ☐ Liner ☐ Conv. to GSW ☐ Conv. to Producer

☐ Commingled Permit #:
☐ Dual Completion Permit #:
☐ SWD Permit #:
☐ EOR Permit #:
☐ GSW Permit #:

10/11/2025	10/12/2025	10/13/2025
Spud Date or Recompletion Date	Date Reached TD	Completion Date or Recompletion Date

API No.: 15-109-21692-00-00
Spot Description:
SW-SE-SW-SW Sec. 32 Twp. 12 S. R. 32 ☐ East ☑ West
70 Feet from ☐ North / ☑ South Line of Section
815 Feet from ☐ East / ☑ West Line of Section
Footages Calculated from Nearest Outside Section Corner:
☐ NE ☐ NW ☐ SE ☑ SW
GPS Location: Lat: *(e.g. xx.xxxxx)*, Long: *(e.g. -xxx.xxxxx)*
Datum: ☐ NAD27 ☐ NAD83 ☐ WGS84
County: Logan
Lease Name: OAKLEY SOUTH #1 Well #: WELL #2
Field Name:
Producing Formation: NA
Elevation: Ground: 3073 Kelly Bushing: 3073
Total Vertical Depth: 100 Plug Back Total Depth:
Amount of Surface Pipe Set and Cemented at: 20 Feet
Multiple Stage Cementing Collar Used? ☐ Yes ☑ No
If yes, show depth set: Feet
If Alternate II completion, cement circulated from:
feet depth to: w/ sx cmt.

Drilling Fluid Management Plan
(Data must be collected from the Reserve Pit)
Chloride content: ppm Fluid volume: bbls
Dewatering method used:
Location of fluid disposal if hauled offsite:
Operator Name:
Lease Name: License #:
Quarter Sec. Twp. S. R. ☐ East ☐ West
County: Permit #:

AFFIDAVIT
I am the affiant and I hereby certify that all requirements of the statutes, rules and regulations promulgated to regulate the oil and gas industry have been fully complied with and the statements herein are complete and correct to the best of my knowledge.

Submitted Electronically

KCC Office Use ONLY
☐ **Confidentiality Requested**
Date:
☐ **Confidential Release Date:**
☐ **Wireline Log Received** ☐ **Drill Stem Tests Received**
☐ **Geologist Report / Mud Logs Received**
☐ **UIC Distribution**
ALT ☐ **I** ☐ **II** ☑ **III** **Approved by:** Alexis Vincent **Date:** 12/02/2025

Page Two

Operator Name: Tallgrass Interstate Gas Transmission, LLC Lease Name: OAKLEY SOUTH #1 Well #: WELL #2

Sec. 32 Twp. 12 S. R. 32 ☐ East ☑ West County: Logan

INSTRUCTIONS: Show important tops of formations penetrated. Detail all cores. Report all final copies of drill stems tests giving interval tested, time tool open and closed, flowing and shut-in pressures, whether shut-in pressure reached static level, hydrostatic pressures, bottom hole temperature, fluid recovery, and flow rates if gas to surface test, along with final chart(s). Attach extra sheet if more space is needed.

Final Radioactivity Log, Final Logs run to obtain Geophysical Data and Final Electric Logs must be emailed to kcc-well-logs@kcc.ks.gov. Digital electronic log files must be submitted in LAS version 2.0 or newer AND an image file (TIFF or PDF).

Drill Stem Tests Taken ☐ Yes ☑ No
(Attach Additional Sheets)

Samples Sent to Geological Survey ☐ Yes ☑ No

Cores Taken ☐ Yes ☑ No

Electric Log Run ☐ Yes ☑ No

Geologist Report / Mud Logs ☐ Yes ☑ No

List All E. Logs Run:

☐ Log Formation (Top), Depth and Datum ☐ Sample

Name	Top	Datum
NA	NA	N

CASING RECORD ☑ New ☐ Used
Report all strings set-conductor, surface, intermediate, production, etc.

Purpose of String	Size Hole Drilled	Size Casing Set (In O.D.)	Weight Lbs. / Ft.	Setting Depth	Type of Cement	# Sacks Used	Type and Percent Additives
Surface	16	10	11.132	20	100% Bentonite Chips	14	100% Bentonite

ADDITIONAL CEMENTING / SQUEEZE RECORD

Purpose:	Depth Top Bottom	Type of Cement	# Sacks Used	Type and Percent Additives
____ Perforate ____ Protect Casing ____ Plug Back TD ____ Plug Off Zone	-			
	-			

1. Did you perform a hydraulic fracturing treatment on this well? ☐ Yes ☑ No *(If No, skip questions 2 and 3)*
2. Does the volume of the total base fluid of the hydraulic fracturing treatment exceed 350,000 gallons? ☐ Yes ☐ No *(If No, skip question 3)*
3. Was the hydraulic fracturing treatment information submitted to the chemical disclosure registry? ☐ Yes ☐ No *(If No, fill out Page Three of the ACO-1)*

Date of first Production/Injection or Resumed Production/ Injection:			Producing Method: ☐ Flowing ☐ Pumping ☐ Gas Lift ☐ Other *(Explain)*			
Estimated Production Per 24 Hours	Oil Bbls.	Gas Mcf	Water Bbls.	Gas-Oil Ratio	Gravity	

DISPOSITION OF GAS:	METHOD OF COMPLETION:	PRODUCTION INTERVAL: Top	Bottom
☐ Vented ☐ Sold ☐ Used on Lease *(If vented, Submit ACO-18.)*	☐ Open Hole ☐ Perf. ☐ Dually Comp. *(Submit ACO-5)* ☐ Commingled *(Submit ACO-4)*		

Shots Per Foot	Perforation Top	Perforation Bottom	Bridge Plug Type	Bridge Plug Set At	Acid, Fracture, Shot, Cementing Squeeze Record *(Amount and Kind of Material Used)*
TUBING RECORD:	Size:	Set At:	Packer At:		

Mail to: KCC - Conservation Division, 266 N. Main, Suite 220, Wichita, Kansas 67202

Form	ACO1 - Well Completion
Operator	Tallgrass Interstate Gas Transmission, LLC
Well Name	OAKLEY SOUTH #1 WELL #2
Doc ID	1868653

Casing

Purpose Of String	Size Hole Drilled	Size Casing Set	Weight	Setting Depth	Type Of Cement	Number of Sacks Used	Type and Percent Additives
Surface	16	10	11.132	20	100% Bentonite Chips	14	100% Bentonite

DEEPWELL GROUND BED DIMENSIONS			
DIMENSION	DESCRIPTION	VALUE	UNITS
A	Hole Diameter	10	IN.
B	Well Depth	100	FT.
C	First Anode from Bottom	50	FT.
D	Anode Spacing	10	FT.
E	Coke Column	50	FT.
F	Hole Plug Column	50	FT.
G	PVC Casing Length	20	FT.
-	Number of Anodes	6	EA
-	Anode Diameter	1	IN.
-	Anode Length	90	IN.

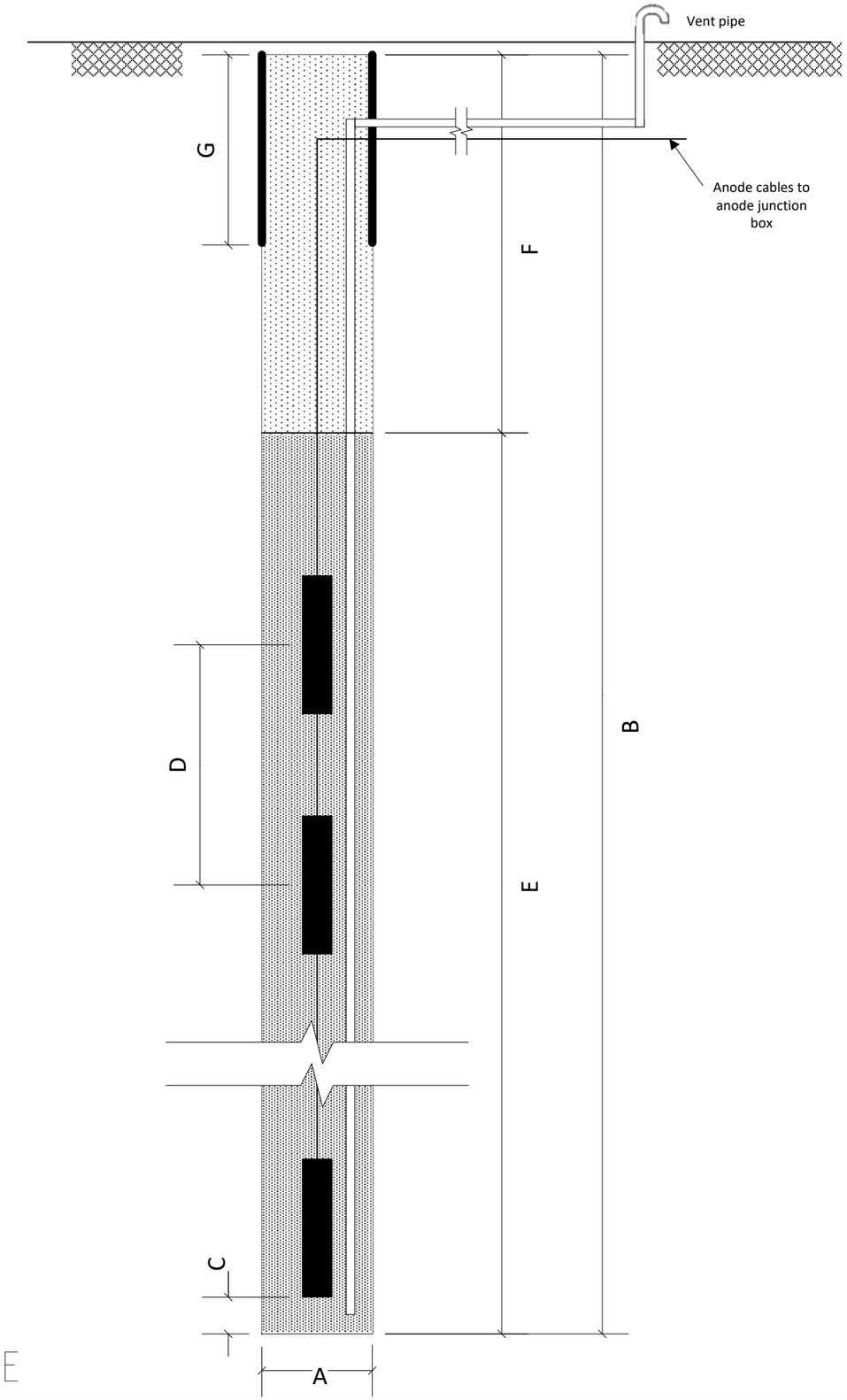

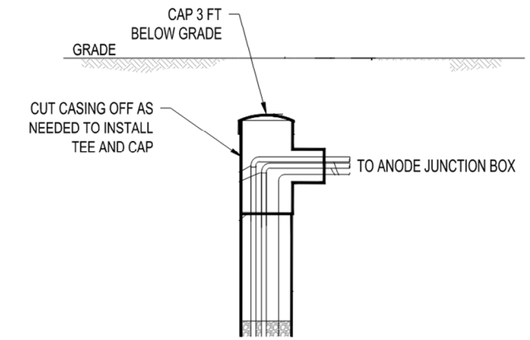

IMPRESSED CURRENT CATHODIC PROTECTION–
DEEP ANODE GROUNDBED BELOW GRADE COMPLETION DETAIL

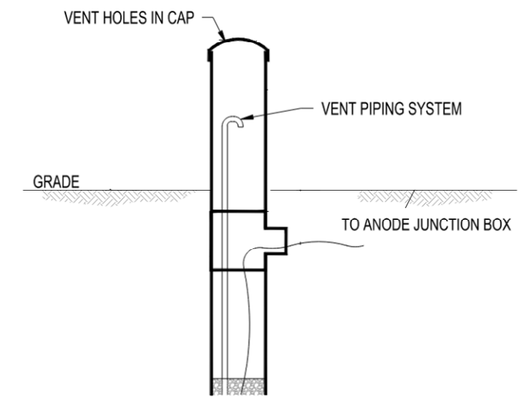

IMPRESSED CURRENT CATHODIC PROTECTION–
DEEP ANODE GROUNDBED ABOVE GRADE COMPLETION DETAIL

DEEP WELL SCHEMATIC TEMPLATE

TALLGRASS	TITLE: Oakley South #1 Well #2			
REV. 0	REVISED DATE 10/14/2025	DRAWN BY Cooper Taylor	DATE 10/14/2025	AFE# 12896
SUPERVISOR REVIEW Andy Cline			DATE 10/14/2025	
ENGINEERING APPROVAL Caitlin Kennedy			DATE 10/14/2025	
COMMISSIONED BY Cooper Taylor			DATE 10/14/2025	