15-179-05161-00-04

WELLBORE DIAGRAM

WELL: Leonard #7
FIELD: Adell
SPUDDED: ^2/22/58
COMPLETION DATE:
API No,:
RRC No.
STATUS:

LOCATION:
LEGAL DESCRIPTION Sec. 12-6S-27W SE NE SW
COUNTY: Sheridan
PRODUCING ZONE :
KB = 2627
GL = 2616
Production:

COMMENTS: **Proposd Completion**

WELL TESTS

Date	Oil	Water	Gas

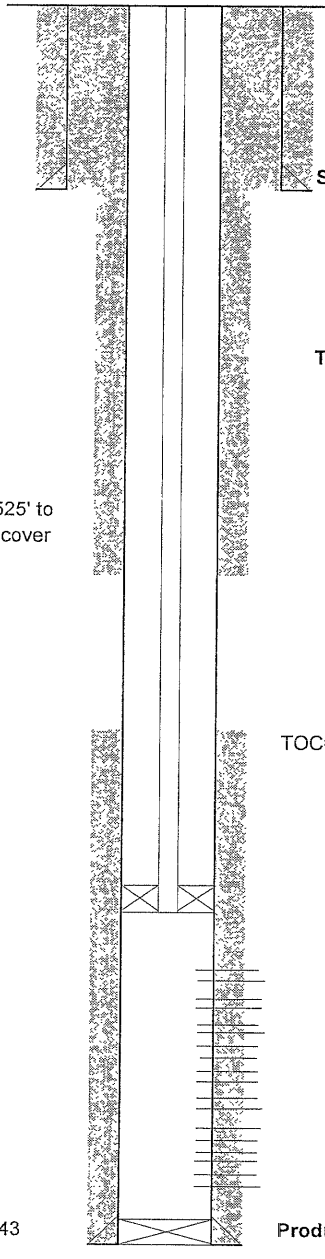

Surface Casing :
8 5/8", 24# @ 200'
cmt'd w/ 175 sx

Tubing String :
2 7/8", J-55, IPC
at 3575

Cement 1525' to surface to cover Dakota.

TOC= 3,000'

AD 1 Pkr @ 3580

Toronto 3620-23
B 3660-72
D 3676-82
E 3695-98
F 3710-13
G 3723-27
3755-58
I 3791
J 3812

PBTD: 3,843
TD: 3,880

Production Casing :
5 1/2", 14# @ 3,879'
cmt'd w/ 200 sx.

Arbuckle

DATE	DESCRIPTION	COST
3/22/58	Perf 1 shot @ 3791 and 1 shot @ 3812.	
8/19/58	Perfed 3753-58, 3676-82, 3666-72.	
6/17/74	Perfed 3723-27, 3710-13, 3695-98, 3602-23. Acidized with total 1250 gals.	
8/24/92	Dump 150 gal 15%.	

(recvd. 3/9/98)

Prepared by : Jim Hill