Tucker ENERGY SERVICES

BOREHOLE VOLUME CALIPER LOG

Company	CHIEFTON OIL CO., INC.
Well	AHS CATTLE CO. #4
Field	STRANATHAN
County	BARBER
State	KANSAS
Country	USA
API No.	15-007-24146-0000

File No : TUL-59455
Company : CHIEFTON OIL CO., INC.
Well : AHS CATTLE CO. #4
Field : STRANATHAN
County : BARBER
State : KANSAS
Country : USA
API No : 15-007-24146-0000

Location :
1805' FNL & 2305' FEL
SE NW SW NE

LSD : **Sect :** 12 **Twp :** 35S **Rge :** 12W

Permanent Datum:	GL	**Elevations:**		**Services:**	
Drilling Measured From:	KB	**KB** 1368.00	Ft	GRT	XYT
Log Measured From:	KB	**DF** 1367.00	Ft	CNT	MLT
Above Permanent Datum:	12.00 Ft	**GL** 1356.00	Ft	LDT	PIT

Date	05-02-2014					
Run Number	1					
Depth--Driller	5610.0	Ft				
Depth--Logger	5605.0	Ft				
First Reading	5571.0	Ft				
Last Reading	981.0	Ft				
Casing--Driller	978.0	Ft				
Casing--Logger	981.0	Ft				
Bit Size	7.875	In				
Casing Size	8.625	In				
Hole Fluid Type	GEL/CHEMICAL					
Density	9.4	LBS/GAL				
Fluid Loss	0.0	CC				
PH/Viscosity	10.0	52.0 SEC/QT				
Sample Source	MEASURED					
RM@Measured Temp.	1.100	@ 66 F				
RMF@Measured Temp	0.970	@ 66 F				
RMC@Measured Temp.	1.330	@ 66 F				
Source RMF/RMC	CALCULATED	CALCULATED				
RM@BHT	0.056	@ 135 F				
Time Circulation Stopped	05-02-2014 5:30 pm					
Max Recorded Temp.	135	F				
Equipment/Base	TRUCK 127	TULSA, OK				
Recorded By	R. KING/ A. BRYANT					
Witnessed By	D. BARKER					

The customer is hereby warned that by providing the log data herein, T. E. S. does not agree to provide any interpretation of log data, conversion of log data to physical rock parameters or recommendations. T. E. S. does not guarantee or warrant either expressly or impliedly, the accuracy of any interpretation of log data, conversion of log data to physical rock parameters or recommendations which may be given by T. E. S. personnel. Any interpretation, conversion or recommendation is not part of the consideration for the agreement between the parties and is not part of any part of the charge by T. E. S. for its services. Any user of the log data is warned that said user is not entitled to rely on interpretations, conversions or recommendations as aforesaid.

Bitsize Intervals

Size (In)	Bottom (Ft)
7.875	5610.00

Casing Strings

Size (In)	Weight (Lbs)	Bottom (Ft)	Top (Ft)
8.625	24.00	978.00	0.00

Run Number	1		
Date	05-02-2014		
Date/Time On Bottom	05-02-2014 9:30 pm		
Depth to Fluid	0.0	Ft	
Salinity	3000.000	PPM	
RMF@BHT	0.500	@ 135 F	
RMC@BHT	0.680	@ 135 F	

Run Number 1

Comments

ALL PRESENTATIONS AS PER CUSTOMER REQUEST
GRT, CNT, LDT, MLT AND PIT RUN IN COMBINATION
CALIPERS ORIENTED ON X-Y AXIS
2.71 G/CC USED TO CALCULATE POROSITY
ANNULAR HOLE VOLUME CALCULATED USING 5.5" PRODUCTION CASING
PHIN IS CALIPER CORRECTED
CLIENT REQUESTED DETAIL PULLED TO 3700'.

GRT: GRP, GRX
CNT: PHIN, CLCNIN, PHXN
LDT: PORL, LCORN, PECLN, LDENN, PORLLS, CLLDIN, PRXL, PECLX, LDENNX, LCORX
MLT: NOR_RF, INV_RF, MSCLPIN
PIT: ILD, ILM, SPU, SFLAEC, CIRD, EIRMDS, VEIRDDS

OPERATORS:
A.DJAHO

Tool String Schematic

Total Tool Length - 53.15 **ft.**
Maximum Outside diameter - 6.00 **in.**
Net Weight in Air - 943.00 **lbs.**

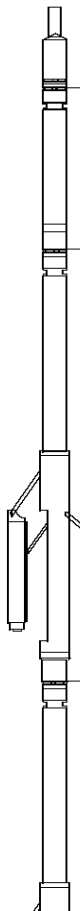

Tool: GRT-B **Length:** 3.40 **ft.** **O.D.** 3.60 **in.**
Gamma Ray Controller
Sonde ID :GRT-BB-117

Measure Point	Tool Offset	Stack Offset	Bottom Offset
GRP	2.00	2.00	51.15

Tool: CNT-AA **Length:** 9.30 **ft.** **O.D.** 4.36 **in.**
Compensated Neutron A Pad on NDT-A
Sonde ID :NDT-AC-027
Source ID :N-1044
Pad ID :CNP-AE-42

Measure Point	Tool Offset	Stack Offset	Bottom Offset
CLCN	6.00	9.40	43.75
PHIN	6.80	10.20	42.95

Tool: LDT-DA **Length:** 9.30 **ft.** **O.D.** 4.80 **in.**
Litho Density D Pad on NDT-A
Sonde ID :NDT-AH-148
Source ID :CSV-587
Pad ID :LDP-DA-02

Measure Point	Tool Offset	Stack Offset	Bottom Offset
CLLD	6.00	18.70	34.45
PEL	7.00	19.70	33.45
PES	7.40	20.10	33.05

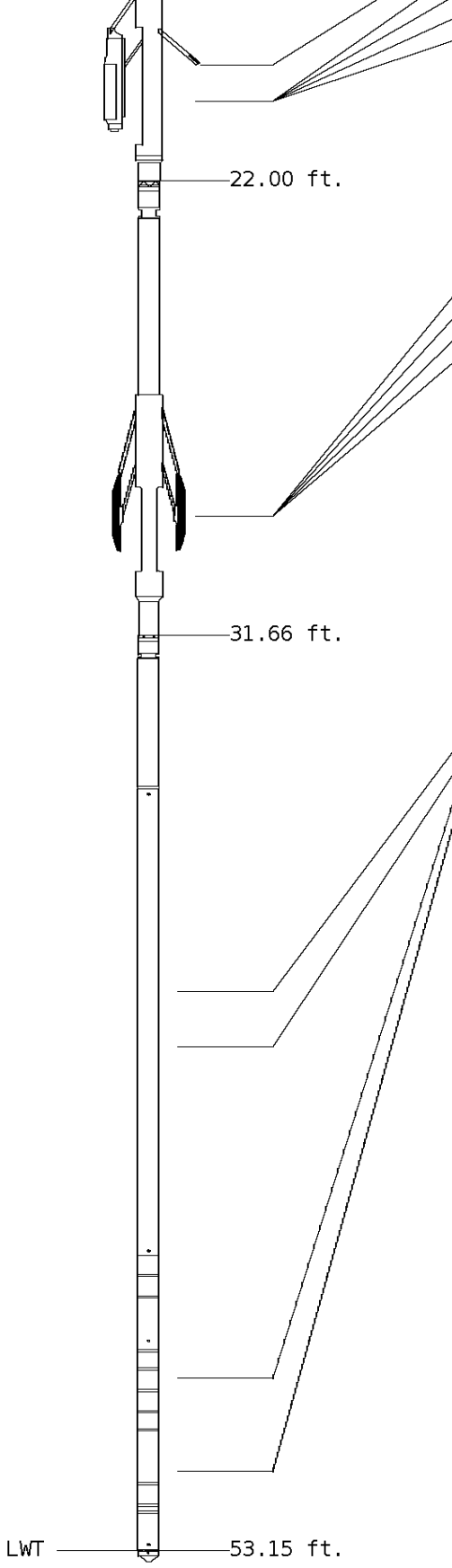

LDEN	7.20	19.90	33.25
LCOR	7.20	19.90	33.25

Tool: MST-DA **Length:** 9.66 **ft.** **O.D.** 6.00 **in.**
Micro Spherically Focused (IC)
Sonde ID :MST-DA-25

Measure Point	Tool Offset	Stack Offset	Bottom Offset
MSFL	7.60	29.60	23.55
MSCLP	7.60	29.60	23.55
INV	7.60	29.60	23.55
NOR	7.60	29.60	23.55

Tool: PIT-CA **Length:** 21.49 **ft.** **O.D.** 3.62 **in.**
Phased Dual Induction w/ RM & D
Sonde ID :PIT-CA-062

Measure Point	Tool Offset	Stack Offset	Bottom Offset
ILD	8.92	40.58	12.56
ILM	10.10	41.76	11.39
SFLU	17.49	49.15	4.00
SP	20.60	52.26	0.88

Well File: CHIEFTON_AHS_CATTLE_4_MAY2-MSTK		**Scale:** 1:600	**Format:** CAL-600
Segment: V1.D1.S6 Repro-MAIN-FINAL		**Acquired:** 2014-05/02 21:30 3.5.0-12850	
Reference: 0		**Processed:** 2014-05/02 23:39 3.5.0-12850	

BIT SIZE
INCHES (IN)

6 **16**

Y CALIPER
INCHES (IN)

16 **26**

16 26
6 16

X CALIPER
INCHES (IN)
16 26
6 16

TENSION
LBS
10000 0

GAMMA RAY
API UNITS
150 300
0 150

BOREHOLE VOLUME CU.FT	ANNULAR HOLE VOLUME CU.FT.

1:600 MAIN SECTION

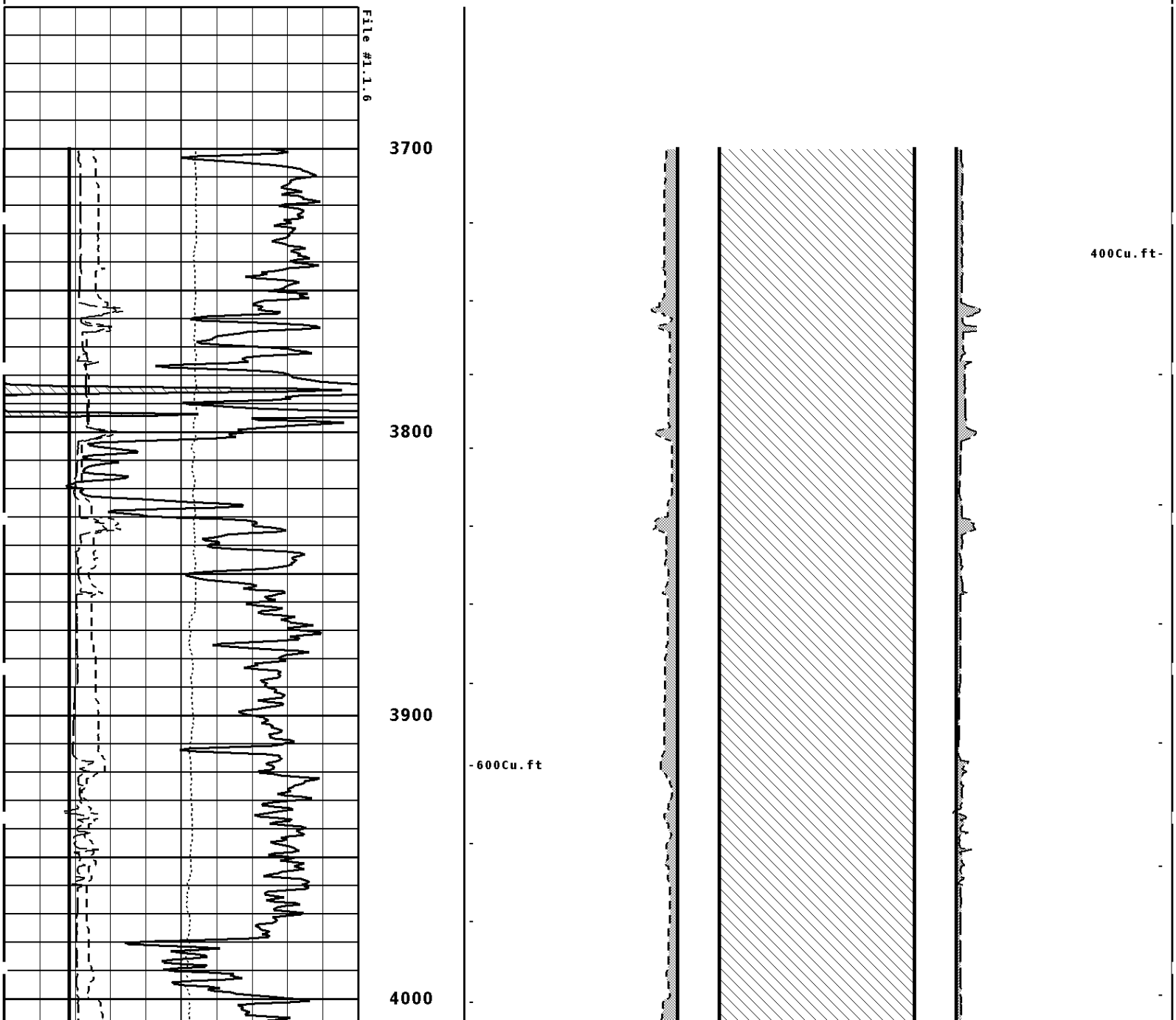

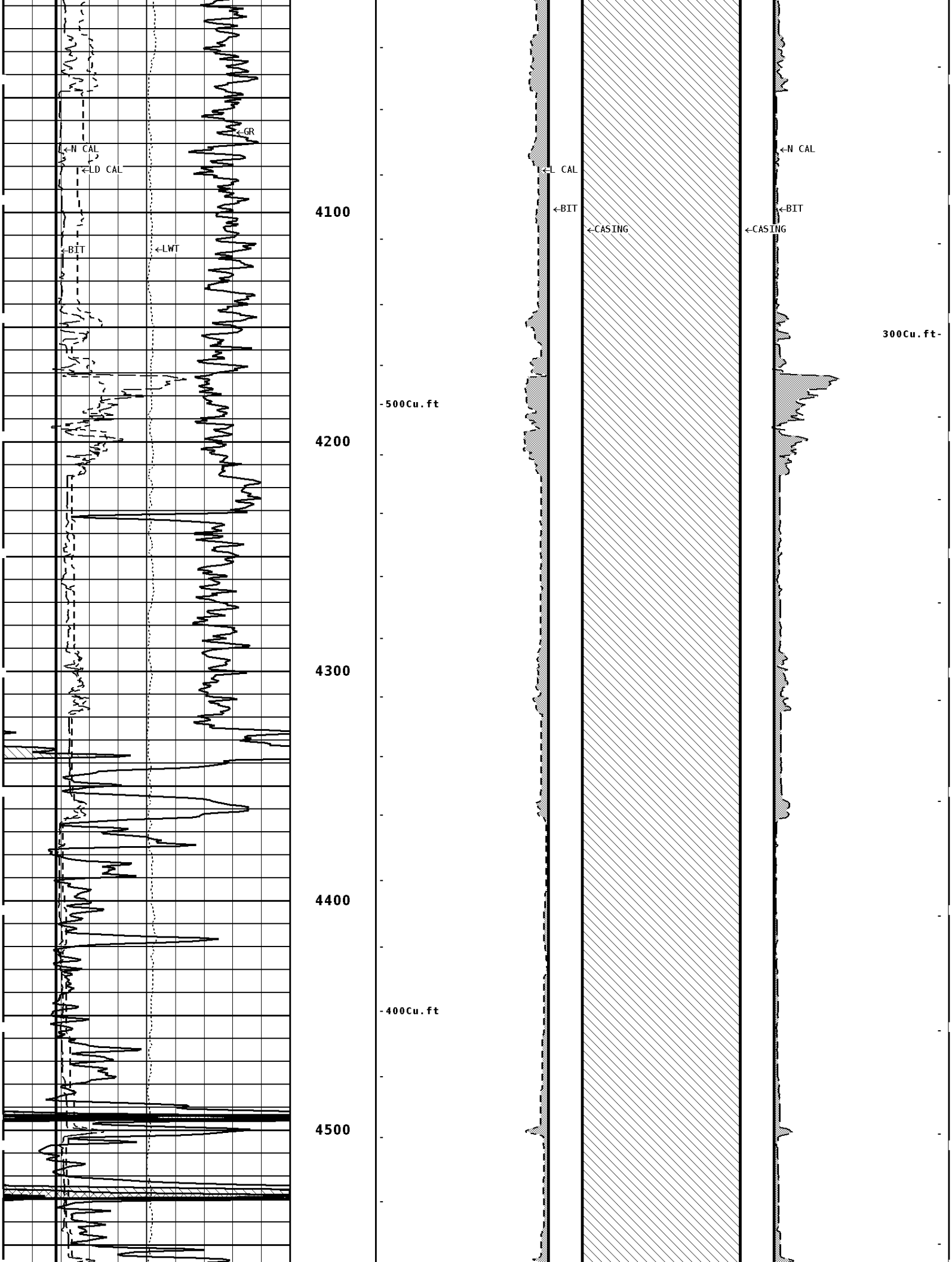
GR
N CAL
LD CAL
BIT
LWT
4100
4200
4300
4400
4500
500Cu.ft
400Cu.ft
L CAL
BIT
CASING
N CAL
BIT
CASING
300Cu.ft

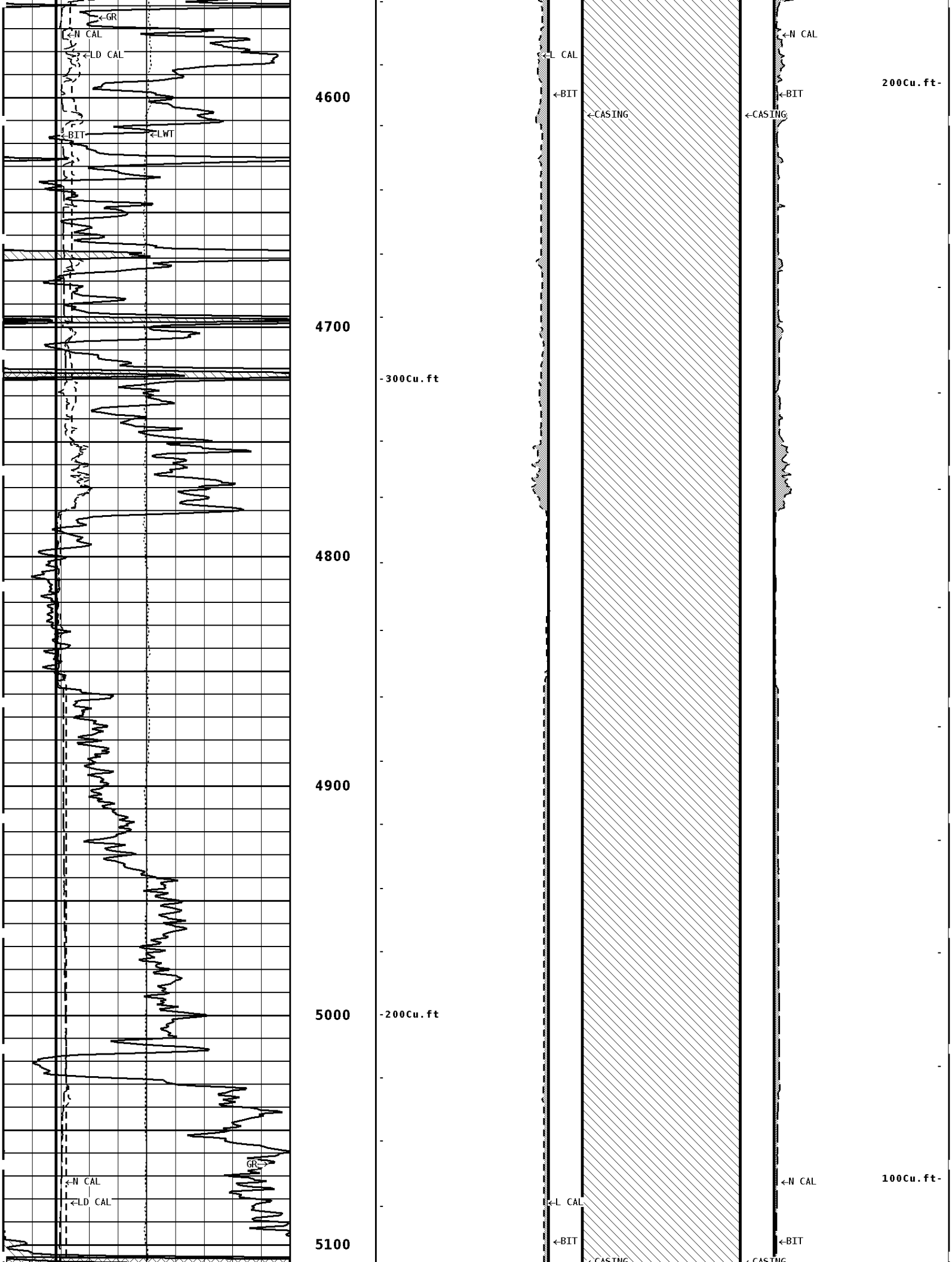
GR
N CAL
LD CAL
BIT
LWT
4600
4700
4800
4900
5000
5100
-300Cu.ft
-200Cu.ft
GR
N CAL
LD CAL
L CAL
BIT
CASING
N CAL
BIT
CASING
200Cu.ft-
N CAL
100Cu.ft-
L CAL
BIT
CASING
BIT

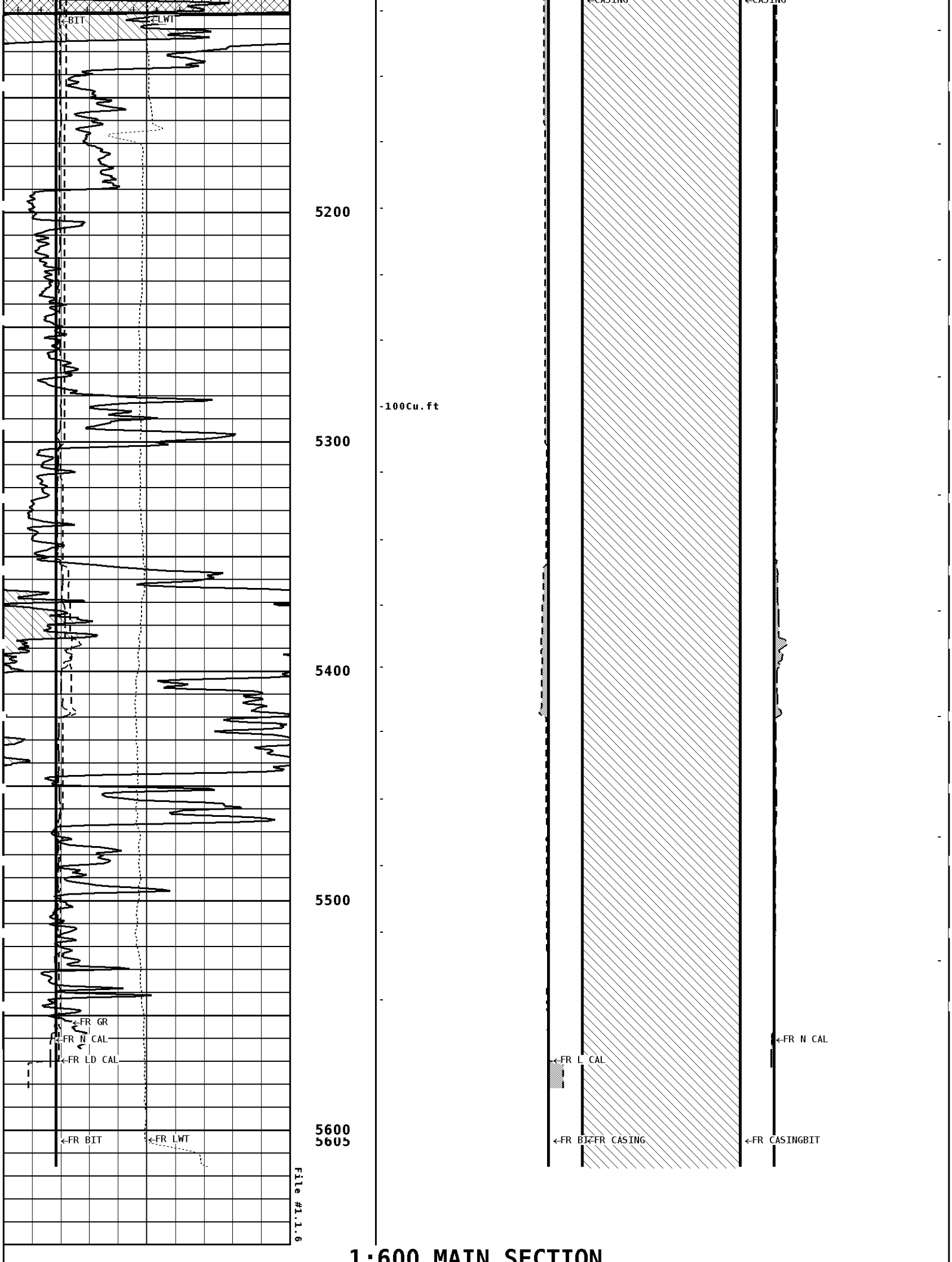

1:600 MAIN SECTION

1.000 MAIN SECTION

GAMMA RAY API UNITS	BOREHOLE VOLUME CU.FT	ANNULAR HOLE VOLUME CU.FT.
150 300 0 150		

TENSION LBS	X CALIPER INCHES (IN)	Y CALIPER INCHES (IN)	BIT SIZE INCHES (IN)
10000 0	16 26 6 16	16 26 6 16	6 16

*** Borehole Zone Factors ***

Zone 1 99999.0 to 0.0 Feet

Drill Bit Size	7.875	in
Casing Diameter	5.500	in

*** Calibration Summary ***

Shop Calibration
GRT-B

Performed : 29-APR-2014 Time : 09:39
Sensor Suite : GR-GR5 ID : GRT-BB-117

	Measured Background	Measured Jig	Units	Calibrated Jig	Units
GR	43	344	CPS	175	GRAPI

Shop Calibration
CNT-AA

Performed : 29-Apr-2014 Time : 10:47
Sensor Suite : CALI-BCN ID : NDT-AC-027

	Jig - Measured Ring#1	Jig - Measured Ring#2	Jig - Calibrated Ring#1	Jig - Calibrated Ring#2	Units
CL # 1	8.0	14.6	6.0	12.0	IN.

Shop Calibration
LDT-DA

Performed : 12-SEP-2013 Time : 09:45
Sensor Suite : CALI-LTH ID : NDT-AH-148

	Jig - Measured Ring#1	Jig - Measured Ring#2	Jig - Calibrated Ring#1	Jig - Calibrated Ring#2	Units
CL # 1	7.8	12.2	6.0	12.0	IN.

Tucker ENERGY SERVICES

Company: CHIEFTON OIL CO., INC.
Well: AHS CATTLE CO. #4
Location: 1805' FNL & 2305' FEL
Logged: 05-02-2014

ENERGY SERVICES

K.B. Elev: 1368.0 Ft